User Manual

EUROCOM

Notebook Computer

W650SC

Service Manual

Notice

The company reserves the right to revise this publication or to change its contents without notice. Information contained herein is for reference only and does not constitute a commitment on the part of the manufacturer or any subsequent vendor. They assume no responsibility or liability for any errors or inaccuracies that may appear in this publication nor are they in anyway responsible for any loss or damage resulting from the use (or misuse) of this publication.

This publication and any accompanying software may not, in whole or in part, be reproduced, translated, transmitted or reduced to any machine readable form without prior consent from the vendor, manufacturer or creators of this publication, except for copies kept by the user for backup purposes.

Brand and product names mentioned in this publication may or may not be copyrights and/or registered trademarks of their respective companies. They are mentioned for identification purposes only and are not intended as an endorsement of that product or its manufacturer.

Version 1.0
February 2015

Trademarks

Intel and Intel Core are trademarks of Intel Corporation.
Windows® is a registered trademark of Microsoft Corporation.
Other brand and product names are trademarks and /or registered trademarks of their respective companies.

About this Manual

This manual is intended for service personnel who have completed sufficient training to undertake the maintenance and inspection of personal computers.

It is organized to allow you to look up basic information for servicing and/or upgrading components of the ***W650SC*** series notebook PC.

The following information is included:

Chapter 1, Introduction, provides general information about the location of system elements and their specifications.
Chapter 2, Disassembly, provides step-by-step instructions for disassembling parts and subsystems and how to upgrade elements of the system.

Appendix A, Part Lists
Appendix B, Schematic Diagrams
Appendix C, Updating the FLASH ROM BIOS

IMPORTANT SAFETY INSTRUCTIONS

Follow basic safety precautions, including those listed below, to reduce the risk of fire, electric shock and injury to persons when using any electrical equipment:

1. Do not use this product near water, for example near a bath tub, wash bowl, kitchen sink or laundry tub, in a wet basement or near a swimming pool.
2. Avoid using a telephone (other than a cordless type) during an electrical storm. There may be a remote risk of electrical shock from lightning.
3. Do not use the telephone to report a gas leak in the vicinity of the leak.
4. Use only the power cord and batteries indicated in this manual. Do not dispose of batteries in a fire. They may explode. Check with local codes for possible special disposal instructions.
5. This product is intended to be supplied by a Listed Power Unit as follows:

- AC Input of 100 - 240V, 50 - 60Hz, DC Output of 19.5V, 6.15A (**120** Watts) minimum AC/DC Adapter.

CAUTION

This Computer's Optical Device is a Laser Class 1 Product

FCC Statement

This device complies with Part 15 of the FCC Rules. Operation is subject to the following two conditions:
This device may not cause harmful interference.
This device must accept any interference received, including interference that may cause undesired operation.

Instructions for Care and Operation

The notebook computer is quite rugged, but it can be damaged. To prevent this, follow these suggestions:

1. **Don't drop it, or expose it to shock.** If the computer falls, the case and the components could be damaged.

Do not expose the computer to any shock or vibration.	*Do not place it on an unstable surface.*	*Do not place anything heavy on the computer.*
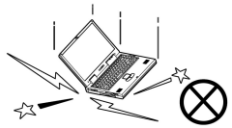	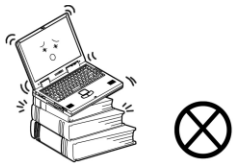	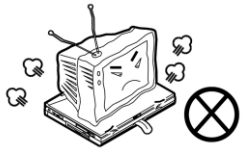

2. **Keep it dry, and don't overheat it.** Keep the computer and power supply away from any kind of heating element. This is an electrical appliance. If water or any other liquid gets into it, the computer could be badly damaged.

Do not expose it to excessive heat or direct sunlight.	*Do not leave it in a place where foreign matter or moisture may affect the system.*	*Don't use or store the computer in a humid environment.*	*Do not place the computer on any surface which will block the vents.*
		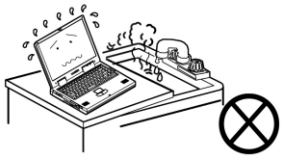	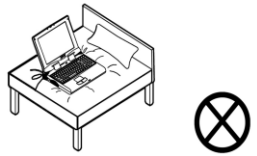

3. **Follow the proper working procedures for the computer**. Shut the computer down properly and don't forget to save your work. Remember to periodically save your data as data may be lost if the battery is depleted.

Do not turn off the power until you properly shut down all programs.	*Do not turn off any peripheral devices when the computer is on.*	*Do not disassemble the computer by yourself.*	*Perform routine maintenance on your computer.*
	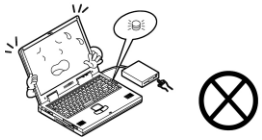		

4. **Avoid interference.** Keep the computer away from high capacity transformers, electric motors, and other strong magnetic fields. These can hinder proper performance and damage your data.
5. **Take care when using peripheral devices**.

Use only approved brands of peripherals.	*Unplug the power cord before attaching peripheral devices.*
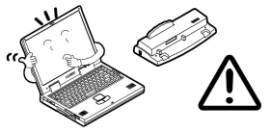	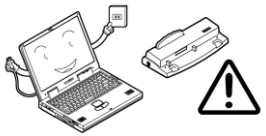

Power Safety

The computer has specific power requirements:

- Only use a power adapter approved for use with this computer.
- Your AC adapter may be designed for international travel but it still requires a steady, uninterrupted power supply. If you are unsure of your local power specifications, consult your service representative or local power company.
- The power adapter may have either a 2-prong or a 3-prong grounded plug. The third prong is an important safety feature; do not defeat its purpose. If you do not have access to a compatible outlet, have a qualified electrician install one.
- When you want to unplug the power cord, be sure to disconnect it by the plug head, not by its wire.
- Make sure the socket and any extension cord(s) you use can support the total current load of all the connected devices.
- Before cleaning the computer, make sure it is disconnected from any external power supplies.

Power Safety Warning

Before you undertake any upgrade procedures, make sure that you have turned off the power, and disconnected all peripherals and cables (including telephone lines and power cord). It is advisable to also remove your battery in order to prevent accidentally turning the machine on.

Do not plug in the power cord if you are wet.	*Do not use the power cord if it is broken.*	*Do not place heavy objects on the power cord.*
	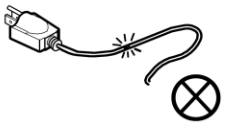	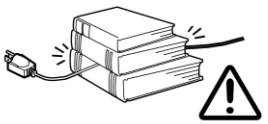

Battery Precautions

- Only use batteries designed for this computer. The wrong battery type may explode, leak or damage the computer.
- Do not continue to use a battery that has been dropped, or that appears damaged (e.g. bent or twisted) in any way. Even if the computer continues to work with a damaged battery in place, it may cause circuit damage, which may possibly result in fire.
- Recharge the batteries using the notebook's system. Incorrect recharging may make the battery explode.
- Do not try to repair a battery pack. Refer any battery pack repair or replacement to your service representative or qualified service personnel.
- Keep children away from, and promptly dispose of a damaged battery. Always dispose of batteries carefully. Batteries may explode or leak if exposed to fire, or improperly handled or discarded.
- Keep the battery away from metal appliances.
- Affix tape to the battery contacts before disposing of the battery.
- Do not touch the battery contacts with your hands or metal objects.

Battery Guidelines

The following can also apply to any backup batteries you may have.

- If you do not use the battery for an extended period, then remove the battery from the computer for storage.
- Before removing the battery for storage charge it to 60% - 70%.
- Check stored batteries at least every 3 months and charge them to 60% - 70%.

Battery Disposal

The product that you have purchased contains a rechargeable battery. The battery is recyclable. At the end of its useful life, under various state and local laws, it may be illegal to dispose of this battery into the municipal waste stream. Check with your local solid waste officials for details in your area for recycling options or proper disposal.

Caution

Danger of explosion if battery is incorrectly replaced. Replace only with the same or equivalent type recommended by the manufacturer. Discard used battery according to the manufacturer's instructions.

Battery Level

Click the battery icon in the taskbar to see the current battery level and charge status. A battery that drops below a level of 10% will not allow the computer to boot up. Make sure that any battery that drops below 10% is recharged within one week.

Related Documents

You may also need to consult the following manual for additional information:

User's Manual on CD/DVD

This describes the notebook PC's features and the procedures for operating the computer and its ROM-based setup program. It also describes the installation and operation of the utility programs provided with the notebook PC.

System Startup

1. Remove all packing materials.
2. Place the computer on a stable surface.
3. Insert the battery and make sure it is locked in position.
4. Securely attach any peripherals you want to use with the computer (e.g. keyboard and mouse) to their ports.
5. Attach the AC/DC adapter to the DC-In jack on the left of the computer, then plug the AC power cord into an outlet, and connect the AC power cord to the AC/DC adapter.
6. Use one hand to raise the lid/LCD to a comfortable viewing angle (do not exceed 130 degrees); use the other hand (as illustrated in Figure 1) to support the base of the computer (**Note**: **Never** lift the computer by the lid/LCD).
7. Press the power button to turn the computer "on".

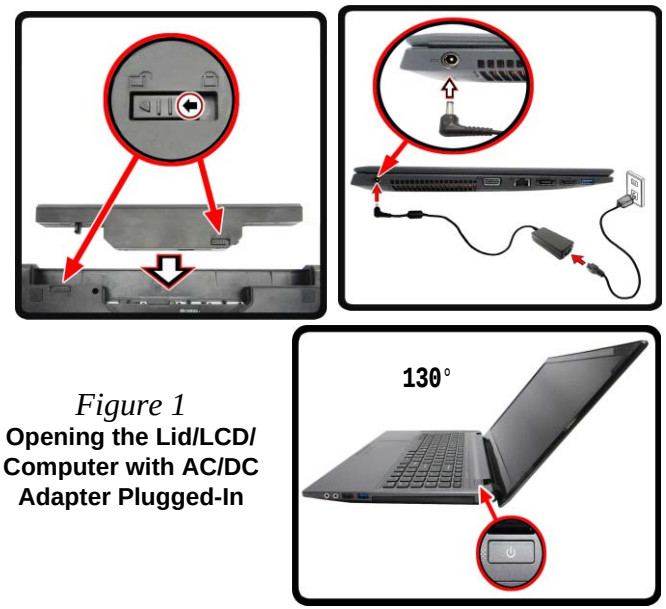

Figure 1
Opening the Lid/LCD/ Computer with AC/DC Adapter Plugged-In

Shut Down

Note that you should always shut your computer down by clicking **Settings** in the **Charms Bar** (use the **Windows Logo Key** + **C** key combination to access the Charms Bar) and choosing **Shut down** from the **Power** menu.

This will help prevent hard disk or system problems.

Contents

Introduction 1-1

Overview 1-1
Specifications 1-2
External Locator - Top View with LCD Panel Open 1-4
External Locator - Front & Right Side Views 1-5
External Locator - Left Side & Rear View 1-6
External Locator - Bottom View 1-7
Mainboard Overview - Top (Key Parts) 1-8
Mainboard Overview - Bottom (Key Parts) 1-9
Mainboard Overview - Top (Connectors) 1-10
Mainboard Overview - Bottom (Connectors) 1-11

Disassembly 2-1

Overview 2-1
Maintenance Tools 2-2
Connections 2-2
Maintenance Precautions 2-3
Disassembly Steps 2-4
Removing the Battery 2-5
Removing the Keyboard 2-6
Removing the Hard Disk Drive 2-7
Removing the Optical (CD/DVD) Device 2-10
Removing the System Memory (RAM) 2-12
Removing and Installing a Processor 2-14
Removing the Wireless LAN Module 2-17
Wireless LAN, Combo, 3G & LTE Module Cables 2-18
Removing the 3G Module 2-19
Removing and Installing the MSATA Module 2-20
Removing the CCD 2-22

Part Lists A-1

Part List Illustration Location A-2
Top A-3
Bottom A-4
DVD DUAL A-5
HDD A-6
2nd HDD A-7
LCD A-8

Schematic Diagrams.....B-1

System Block Diagram B-2
Processor 1/7-DMI, FDI, PEG B-3
Processor 2/7- CLK, MISC B-4
Processor 3/7- (DDR3) B-5
Processor 4/7- Power B-6
Processor 5/7- GFX PWR B-7
Processor 6/7- GND B-8
Processor 7/7- RSVD B-9
DDR3 SO-DIMM_1 .....B-10
DDR3 SO-DIMM_2 .....B-11
PS8625 .....B-12
PANEL, INVERTER B-13
VGA PCI-E Interface B-14
VGA Frame Buffer Interface B-15
VGA Frame Buffer A B-16
VGA Frame Buffer C B-17
VGA I/O B-18
VGA NVVDD Decoupling B-19
CRT B-20
Lynx 1/9 .....B-21
Lynx 2/9 .....B-22
Lynx 3/9 .....B-23

Lynx 4/9 ..... B-24
Lynx 5/9 ..... B-25
Lynx 6/9 ..... B-26
Lynx 7/9 ..... B-27
Lynx 8/9 ..... B-28
Lynx 9/9 ..... B-29
Mini PCIE, Fan Con B-30
USB Charge, CCD, TPM, Power Con B-31
eSATA/USB3.0, LED B-32
Card Reader (RTL8411B) B-33
HDD, TP, Audio, USB B-34
HDMI, RJ45, Fan, KBC, LED B-35
AUDIO CODEC VT1802S B-36
KBC-ITE IT8587 ..... B-37
5VS, 3VS, 3.3V, 5V B-38
1.05V B-39
VDD3, VDD5 ..... B-40
1.5V or 1.35V / 0.75VS, 1.5VS B-41
POWER VCORE B-42
N16P/S, NVVDD, PEX, FBVDDQ B-43
DC IN, CHARGER B-44
AUDIO BOARD B-45
POWER SWITCH BOARD B-46
ODD to HDD BOARD B-47

Updating the FLASH ROM BIOS..... C-1

Download the BIOS C-1
Unzip the downloaded files to a bootable CD/DVD/ or
USB Flash drive C-1
Set the computer to boot from the external drive C-1
Use the flash tools to update the BIOS C-2
Restart the computer (booting from the HDD) C-2

Chapter 1: Introduction

Overview

This manual covers the information you need to service or upgrade the ***W650SC*** series notebook computer. Information about operating the computer (e.g. getting started, and the *Setup* utility) is in the *User's Manual*. Information about drivers (e.g. VGA & audio) is also found in the *User's Manual*. The manual is shipped with the computer.

Operating systems (e.g. *Windows 8.1*, etc.) have their own manuals as do application softwares (e.g. word processing and database programs). If you have questions about those programs, you should consult those manuals.

The ***W650SC*** series notebook is designed to be upgradeable. See ***Disassembly on page 2 - 1*** for a detailed description of the upgrade procedures for each specific component. Please take note of the warning and safety information indicated by the " " symbol.

The balance of this chapter reviews the computer's technical specifications and features.

Specifications

Latest Specification Information

The specifications listed here are correct at the time of sending them to the press. Certain items (particularly processor types/speeds) may be changed, delayed or updated due to the manufacturer's release schedule. Check with your service center for more details.

CPU

The CPU is not a user serviceable part. Accessing the CPU in any way may violate your warranty.

Processor Options

Intel® Core™ i7 Processor

i7-4910MQ (2.90GHz)

8MB L3 Cache, **22nm**, DDR3L-1600MHz, TDP 47W

i7-4810MQ (2.80GHz), i7-4710MQ (2.50GHz)

6MB L3 Cache, **22nm**, DDR3L-1600MHz, TDP 47W

i7-4610M (3.00GHz)

4MB L3 Cache, **22nm**, DDR3L-1600MHz, TDP 37W

Intel® Core™ i5 Processor

i5-4340M (2.90GHz), i5-4310M (2.70GHz), i5-4210M (2.60GHz)

3MB L3 Cache, **22nm**, DDR3L-1600MHz, TDP 37W

Intel® Core™ i3 Processor

i3-4110M (2.60GHz)

3MB L3 Cache, **22nm**, DDR3L-1600MHz, TDP 37W

Core Logic

Intel® HM86 Chipset

BIOS

48Mb SPI Flash ROM

AMI BIOS

Memory

Two 204 Pin SO-DIMM Sockets Supporting **DDR3L 1600MHz** Memory

Memory Expandable up to 16GB

(The real memory operating frequency depends on the FSB of the processor.)

Storage

(**Factory Option**) One 12.7mm(h) Optical Device Type Drive (Super Multi Drive)

(**Factory Option**) 2.5" 9.5mm 2nd HDD/SSD caddy

One Changeable 2.5" 9.5mm/7.0mm (h) SATA HDD/SSD

(**Factory Option**) One mSATA Solid State Drive (SSD)

LCD Options

15.6" (39.62cm) HD / FHD

Video Adapter

Intel® Integrated GPU and NVIDIA® Discrete GPU

Supports Microsoft Hybrid Graphics

Intel Integrated GPU

Intel® HD Graphics 4600

Dynamic Frequency (Intel Dynamic Video Memory Technology for up to **1.7GB**)

Microsoft DirectX®11.1 Compatible

NVIDIA® Discrete GPU

NVIDIA® GeForce GTX 950M

2GB DDR3 Video RAM on board

Microsoft DirectX® 12 Compatible

Audio

High Definition Audio Compliant Interface

2 * Built-In Speakers

Built-In Microphone

Sound Blaster™ Cinema 2

Security

Security (Kensington® Type) Lock Slot

BIOS Password

(**Factory Option**) TPM v 2.0

Keyboard

Full-size “WinKey” keyboard (with numeric keypad)

Pointing Device

Built-in Touchpad

Interface

One USB 2.0 Port
Two USB 3.0 Ports
One eSATA Port (USB 3.0 Combo)
One HDMI-Out Port
One External Monitor Port
One Headphone-Out Jack
One Microphone-In Jack
One RJ-45 LAN Jack
One DC-in Jack

Mini Card Slots

Slot 1 for **WLAN** Module or **WLAN and Bluetooth** Combo Module
Slot 2 for mSATA **SSD**
Or
(**Factory Option**) Slot 2 for **M.2 3G/4G** Module

Card Reader

Embedded Multi-In-1 Card Reader
MMC (MultiMedia Card) / RS MMC
SD (Secure Digital) / Mini SD / SDHC/ SDXC
MS (Memory Stick) / MS Pro / MS Duo

Communication

Built-In Gigabit Ethernet LAN
1.0M HD PC Camera Module
(**Factory Option**) 2.0M FHD PC Camera Module
(**Factory Option**) 3G or 4G M.2 Module

WLAN/ Bluetooth Half Mini-Card Modules:

(**Factory Option**) Intel® Wireless-AC 3160 Wireless LAN (**802.11ac**) + Bluetooth 4.0
(**Factory Option**) Intel® Wireless-AC 7260 Wireless LAN (**802.11ac**) + Bluetooth 4.0
(**Factory Option**) Intel® Wireless-N 7260 Wireless LAN (**802.11b/g/n**)
(**Factory Option**) Third-Party Wireless LAN (**802.11b/g/n**)
(**Factory Option**) Third-Party Wireless LAN (**802.11b/g/n**) + Bluetooth 4.0

Environmental Spec

Temperature
Operating: 5°C - 35°C
Non-Operating: -20°C - 60°C
Relative Humidity
Operating: 20% - 80%
Non-Operating: 10% - 90%

Power

Full Range AC/DC Adapter
AC Input: 100 - 240V, 50 - 60Hz
DC Output: 19.5V, 6.15A (**120W**)

(**Factory Option**) Removable 6 Cell Smart Lithium-Ion Battery Pack, 62.16WH
(**Factory Option**) Removable 6 Cell Smart Lithium-Ion Battery Pack, 48.84WH

Dimensions & Weight

374mm (w) * 252mm (d) * 14 - 31.4mm (h)
OR
374mm (w) * 249.5mm (d) * 14.8 - 32.8mm (h)
2.5kg (Barebone with ODD and 62.16WH Battery)

External Locator - Top View with LCD Panel Open

Figure 1
Top View

1. PC Camera
2. Built-In Microphone
3. *PC Camera LED
   **When the PC camera is in use, the LED will be illuminated in red.*
4. LCD
5. Power Button
6. LED Indicator
7. Keyboard
8. Touchpad & Buttons

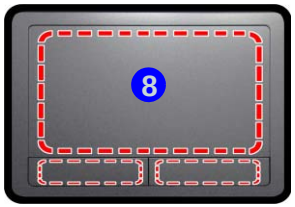

Note that the Touchpad and Buttons valid operational area is that indicated within the red dotted lines.

External Locator - Front & Right Side Views

FRONT VIEW

Figure 2
Front View

1. LED Indicator
2. Multi-in-1 Card Reader

RIGHT SIDE VIEW

Figure 3
Right Side View

1. Microphone-In Jack
2. Headphone-Out Jack
3. USB Ports
4. Optical Device Drive Bay
5. Emergency Eject Hole
6. Security Lock Slot

External Locator - Left Side & Rear View

Figure 4
Left Side View

1. DC-In Jack
2. Vent
3. External Monitor Port
4. RJ-45 LAN Jack
5. Combined eSATA/ USB 3.0 Port
6. HDMI-Out Port
7. USB 3.0 Ports

LEFT SIDE VIEW

Figure 5
Rear View

1. Battery

REAR VIEW

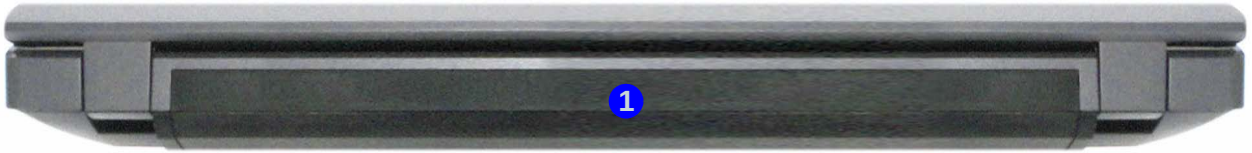

External Locator - Bottom View

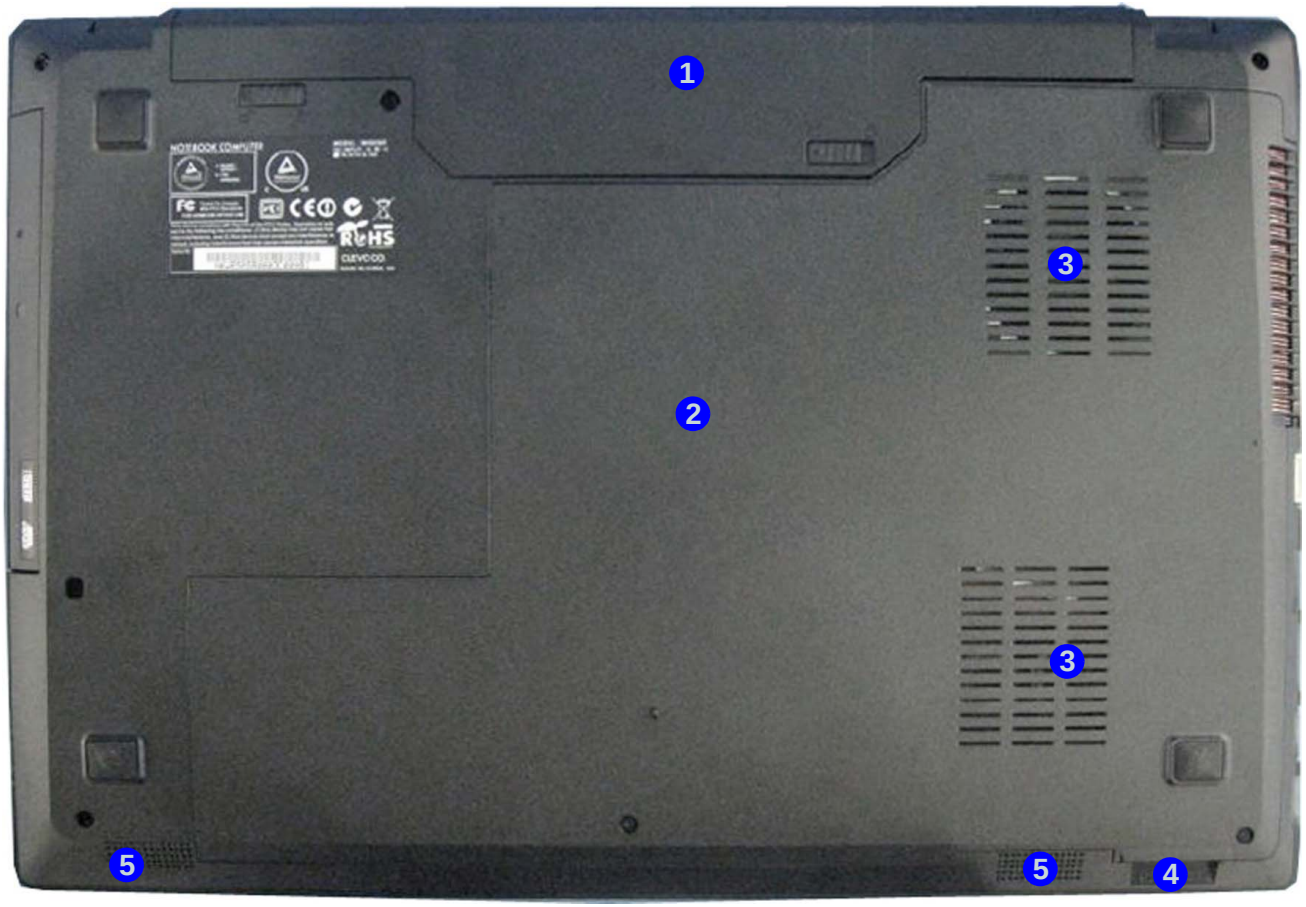

Figure 6
Bottom View

1. Battery
2. Component Bay Cover
3. Vent
4. Multi-in-1 Card Reader
5. Speakers

Overheating

To prevent your computer from overheating, make sure nothing blocks any vent while the computer is in use.

Mainboard Overview - Top (Key Parts)

Figure 7
Mainboard Top Key Parts

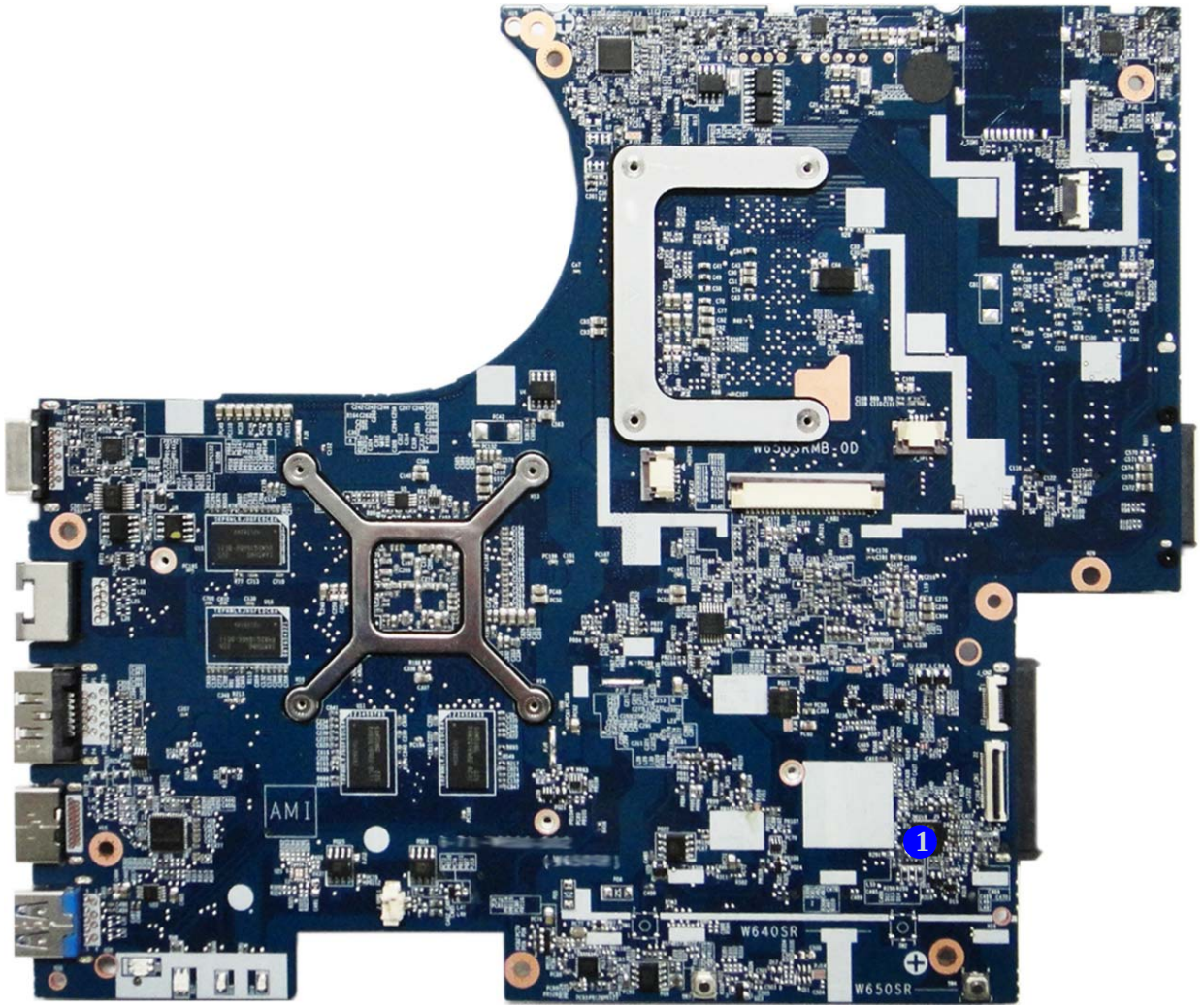

1. Audio Codec

Mainboard Overview - Bottom (Key Parts)

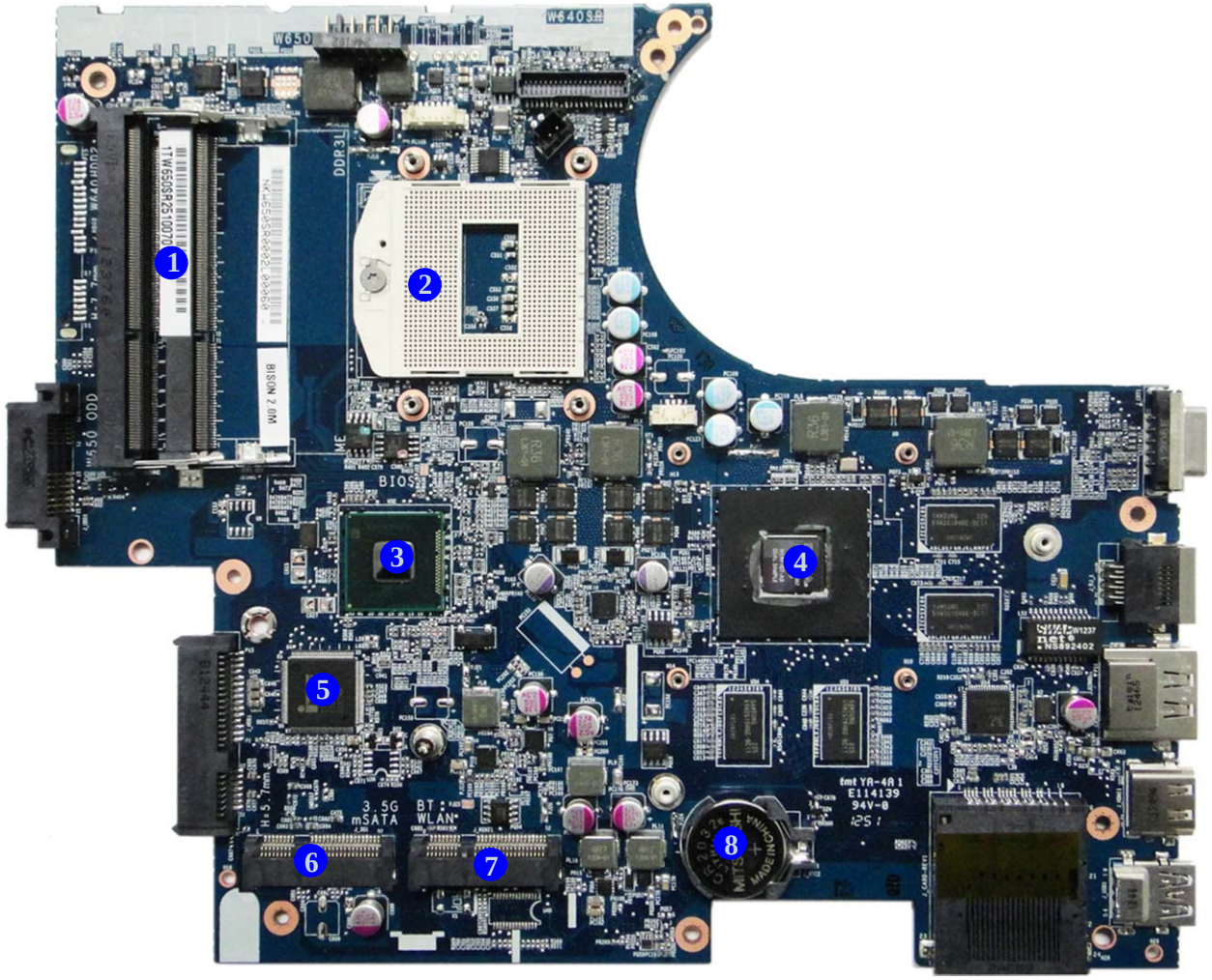

Figure 8
Mainboard Bottom Key Parts

1. Memory Slots DDR3 SO-DIMM
2. CPU Socket (no CPU installed)
3. Platform Controller Hub
4. GPU
5. KBC-ITE IT8518
6. Mini-Card Connector (3G Module)
7. Mini-Card Connector (WLAN Module)
8. CMOS Battery

Mainboard Overview - Top (Connectors)

Figure 9
Mainboard Top Connectors

1. CRT Port
2. RJ-45 LAN Jack
3. ESATA + USB 3.0
4. HDMI-Out Port
5. USB Port 3.0 Connector
6. Speaker Connector
7. Keyboard Cable Connector
8. TP Connector
9. TP Connector

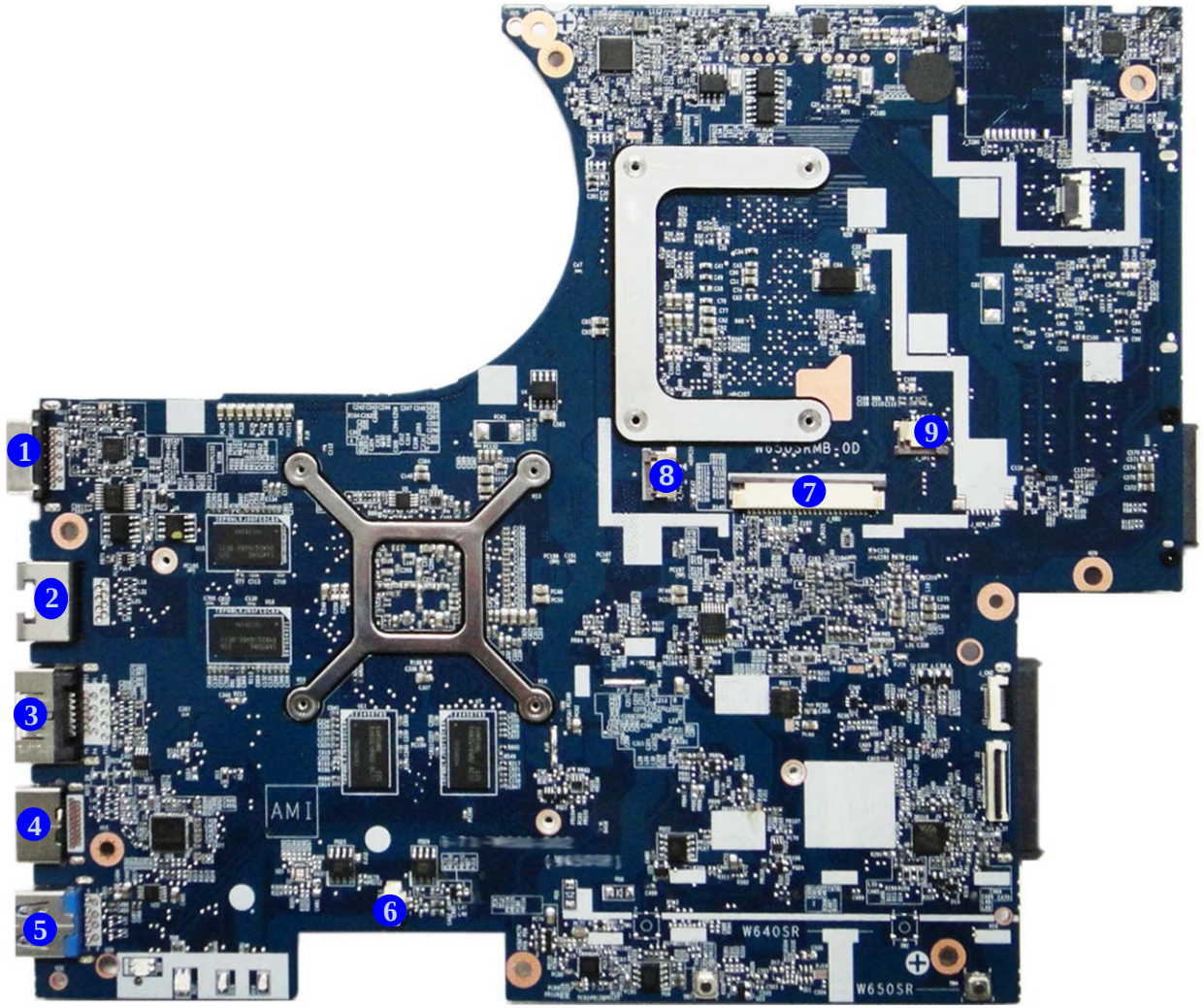

Mainboard Overview - Bottom (Connectors)

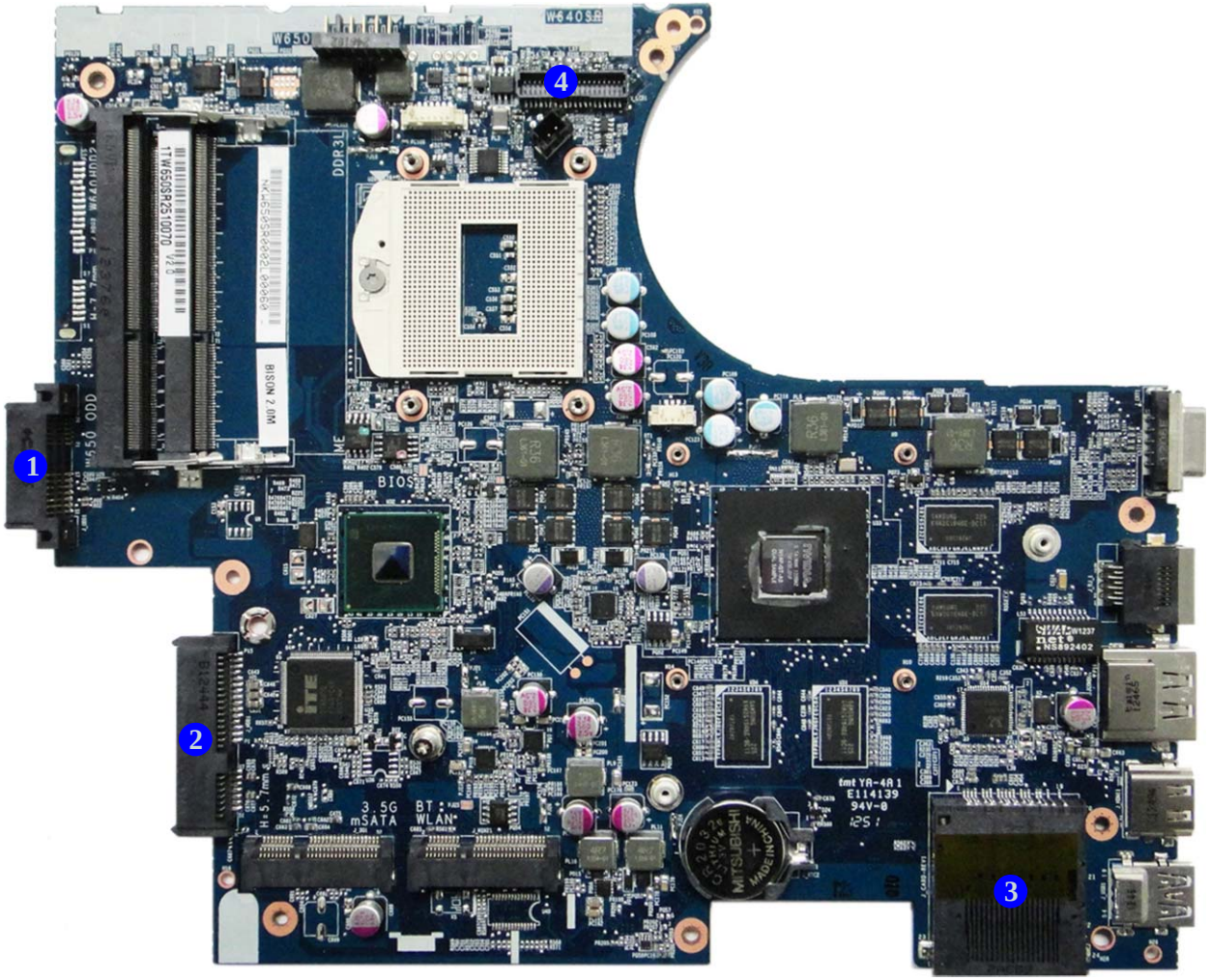

Figure 10
Mainboard Bottom Connectors

1. ODD Connector
2. HDD Connector
3. Multi-in-1 Card Reader
4. LCD Cable Connector

Chapter 2: Disassembly

Overview

This chapter provides step-by-step instructions for disassembling the ***W650SC*** series notebook's parts and subsystems. When it comes to reassembly, reverse the procedures (unless otherwise indicated).

We suggest you completely review any procedure before you take the computer apart.

Procedures such as upgrading/replacing the RAM, optical device and hard disk are included in the User's Manual but are repeated here for your convenience.

To make the disassembly process easier each section may have a box in the page margin. Information contained under the figure # will give a synopsis of the sequence of procedures involved in the disassembly procedure. A box with a lists the relevant parts you will have after the disassembly process is complete. **Note**: The parts listed will be for the disassembly procedure listed ONLY, and not any previous disassembly step(s) required. Refer to the part list for the previous disassembly procedure. The amount of screws you should be left with will be listed here also.

A box with a will also provide any possible helpful information. A box with a contains warnings.

An example of these types of boxes are shown in the sidebar.

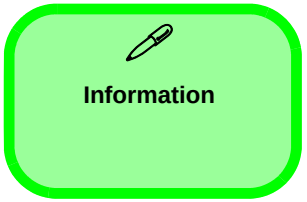

NOTE: All disassembly procedures assume that the system is turned **OFF**, and disconnected from any power supply (the battery is removed too).

Maintenance Tools

The following tools are recommended when working on the notebook PC:

- M3 Philips-head screwdriver
- M2.5 Philips-head screwdriver (magnetized)
- M2 Philips-head screwdriver
- Small flat-head screwdriver
- Pair of needle-nose pliers
- Anti-static wrist-strap

Connections

Connections within the computer are one of four types:

Locking collar sockets for ribbon connectors	To release these connectors, use a small flat-head screwdriver to gently pry the locking collar away from its base. When replacing the connection, make sure the connector is oriented in the same way. The pin1 side is usually not indicated.
Pressure sockets for multi-wire connectors	To release this connector type, grasp it at its head and gently rock it from side to side as you pull it out. Do not pull on the wires themselves. When replacing the connection, do not try to force it. The socket only fits one way.
Pressure sockets for ribbon connectors	To release these connectors, use a small pair of needle-nose pliers to gently lift the connector away from its socket. When replacing the connection, make sure the connector is oriented in the same way. The pin1 side is usually not indicated.
Board-to-board or multi-pin sockets	To separate the boards, gently rock them from side to side as you pull them apart. If the connection is very tight, use a small flat-head screwdriver - use just enough force to start.

Maintenance Precautions

The following precautions are a reminder. To avoid personal injury or damage to the computer while performing a removal and/or replacement job, take the following precautions:

1. **Don't drop it**. Perform your repairs and/or upgrades on a stable surface. If the computer falls, the case and other components could be damaged.
2. **Don't overheat it**. Note the proximity of any heating elements. Keep the computer out of direct sunlight.
3. **Avoid interference**. Note the proximity of any high capacity transformers, electric motors, and other strong magnetic fields. These can hinder proper performance and damage components and/or data. You should also monitor the position of magnetized tools (i.e. screwdrivers).
4. **Keep it dry**. This is an electrical appliance. If water or any other liquid gets into it, the computer could be badly damaged.
5. **Be careful with power**. Avoid accidental shocks, discharges or explosions.
   - Before removing or servicing any part from the computer, turn the computer off and detach any power supplies.
   - When you want to unplug the power cord or any cable/wire, be sure to disconnect it by the plug head. Do not pull on the wire.
6. **Peripherals** – Turn off and detach any peripherals.
7. **Beware of static discharge**. ICs, such as the CPU and main support chips, are vulnerable to static electricity. Before handling any part in the computer, discharge any static electricity inside the computer. When handling a printed circuit board, do not use gloves or other materials which allow static electricity buildup. We suggest that you use an anti-static wrist strap instead.
8. **Beware of corrosion**. As you perform your job, avoid touching any connector leads. Even the cleanest hands produce oils which can attract corrosive elements.
9. **Keep your work environment clean**. Tobacco smoke, dust or other air-born particulate matter is often attracted to charged surfaces, reducing performance.
10. **Keep track of the components**. When removing or replacing any part, be careful not to leave small parts, such as screws, loose inside the computer.

Power Safety Warning

Before you undertake any upgrade procedures, make sure that you have turned off the power, and disconnected all peripherals and cables (including telephone lines and power cord). It is advisable to also remove your battery in order to prevent accidentally turning the machine on.

Cleaning

Do not apply cleaner directly to the computer, use a soft clean cloth.
Do not use volatile (petroleum distillates) or abrasive cleaners on any part of the computer.

Disassembly Steps

The following table lists the disassembly steps, and on which page to find the related information. **PLEASE PERFORM THE DISASSEMBLY STEPS IN THE ORDER INDICATED.**

To remove the Battery:

1. Remove the battery *page 2 - 5*

To remove the Keyboard:

1. Remove the battery *page 2 - 5*
2. Remove the keyboard *page 2 - 6*

To remove the HDD:

1. Remove the battery *page 2 - 5*
2. Remove the HDD *page 2 - 7*

To remove the Optical Device:

1. Remove the battery *page 2 - 5*
2. Remove the Optical device *page 2 - 10*

To remove the System Memory:

1. Remove the battery *page 2 - 5*
2. Remove the system memory *page 2 - 12*

To remove and install a Processor:

1. Remove the battery *page 2 - 5*
2. Remove the processor *page 2 - 14*
3. Install the processor *page 2 - 16*

To remove the Wireless LAN Module:

1. Remove the battery *page 2 - 5*
2. Remove the WLAN *page 2 - 17*

To remove the 3G Module:

1. Remove the battery *page 2 - 5*
2. Remove the 3G module *page 2 - 19*

To remove and install the MSATA Module:

1. Remove the battery *page 2 - 5*
2. Remove the MSATA *page 2 - 20*
3. Install the MSATA *page 2 - 21*

To remove the CCD Module:

1. Remove the battery *page 2 - 5*
2. Remove the CCD module *page 2 - 22*

Removing the Battery

1. Turn the computer **off**, and turn it over.
2. Slide the latch 1 in the direction of the arrow (***Figure 1a***).
3. Slide the latch 2 in the direction of the arrow, and hold it in place (***Figure 1a***).
4. Slide the battery 3 in the direction of the arrow 4 (***Figure 1b***).

Figure 1
Battery Removal

a. Slide the latch and hold it in place.
b. Slide the battery in the direction of the arrow.

a.

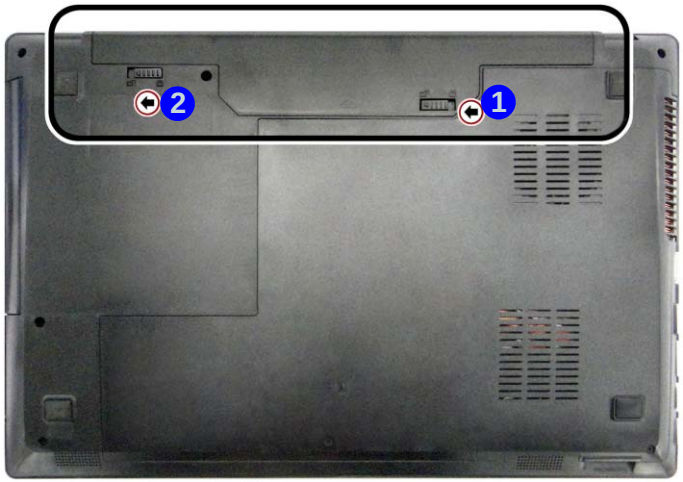

b.

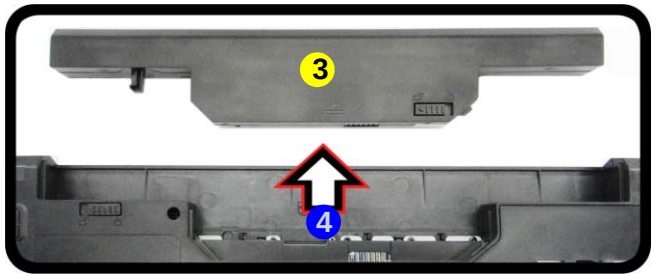

3. Battery

Figure 2
Keyboard Removal

a. Press at point 1 to unsnap LED cover module.
b. Remove the LED cover module.
c. Remove the screws.
d. Carefully lift the keyboard up and disconnect the ribbon cable.
e. Remove the keyboard.

Removing the Keyboard

1. Turn **off** the computer, turn it over, remove the battery (*page 2 - 5*).
2. Carefully press at point 1, from the bottom of the computer to unsnap the LED cover module (use the eject pin tool to do this - *Figure 2a*)
3. Turn the computer over, remove the unsnap LED cover module 2 from the computer (*Figure 2b*).
4. Remove screws 3 - 7 from the keyboard (*Figure 2c*).
5. Lift the keyboard up, being careful not to bend the keyboard ribbon cable 8. Disconnect the keyboard ribbon cable from the locking collar socket 9 (*Figure 2d*).
6. Carefully lift the keyboard 10 off the computer (*Figure 2e*).

a.

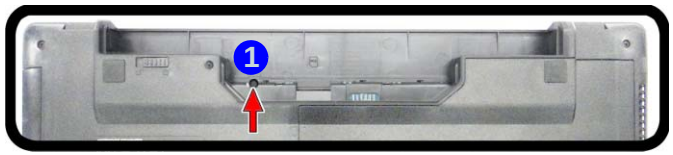

b.

c

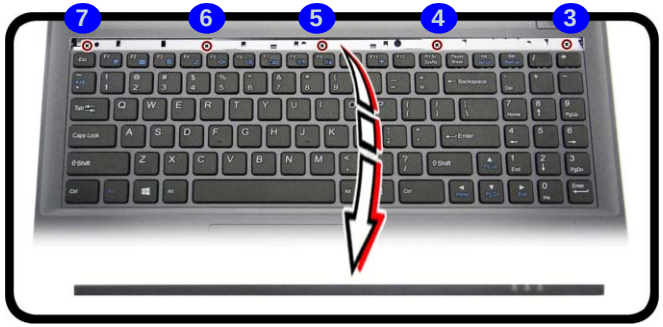

d.

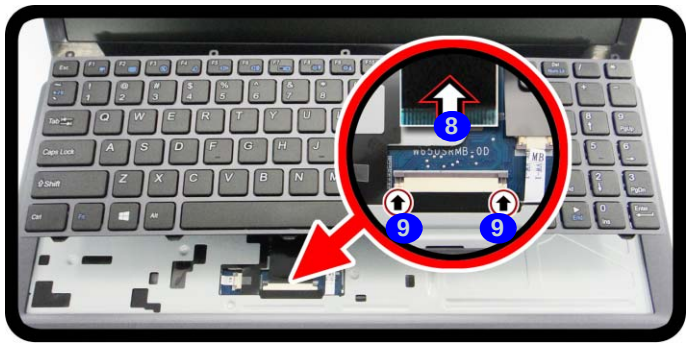

e.

2. LED Cover Module
10. Keyboard

- 5 Screws

Removing the Hard Disk Drive

The hard disk drive can be taken out to accommodate other 2.5" serial (SATA) hard disk drives with a height of 9.5mm or 7mm (h). Follow your operating system's installation instructions, and install all necessary drivers and utilities (as outlined in **Chapter 4 of the User's Manual**) when setting up a new hard disk.

Hard Disk Upgrade Process

1. Turn **off** the computer, and remove the battery (*page 2 - 5*).
2. Locate the component bay cover and remove screws 1 - 2 (*Figure 3a*).
3. Slide the component bay cover 3 until the cover and case indicators 4 are aligned (*Figure 3b*).

Figure 3
HDD Assembly Removal

a. Remove the screws.
b. Remove the component bay cover.

a.

b.

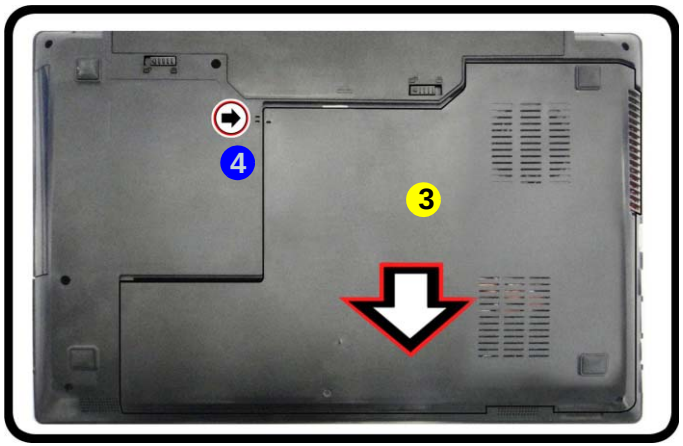

3. Component Bay Cover

- 2 Screws

Figure 4
HDD Assembly Removal (cont'd.)

c. Remove the bay cover.
d. Lift the sponge and slide the HDD assembly in the direction of the arrow to lift the HDD assembly out.
e. Remove the screws and adhesive cover.

4. Remove the component bay cover 3 (*Figure 4c*).
5. Lift the HDD sponge up at point 4 and grip the tab to slide the hard disk assembly in the direction of arrow 5 to lift the hard disk assembly 6 out (*Figure 4d*).
6. Remove the screws 7 - 8 and the adhesive cover 9 from the hard disk 10 (*Figure 4e*).
7. Reverse the process to install a new hard disk (do not forget to replace the screws and bay cover).

c.

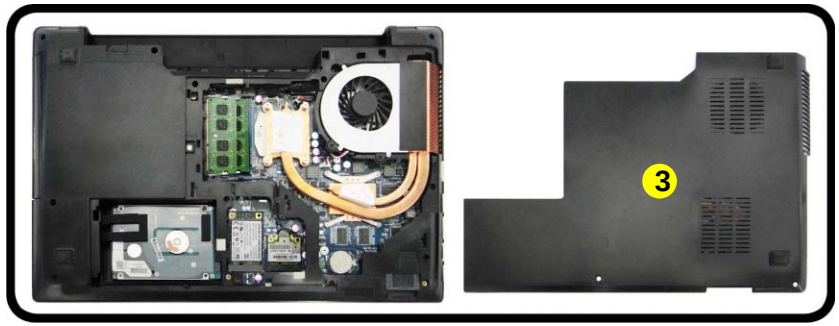

d.

e.

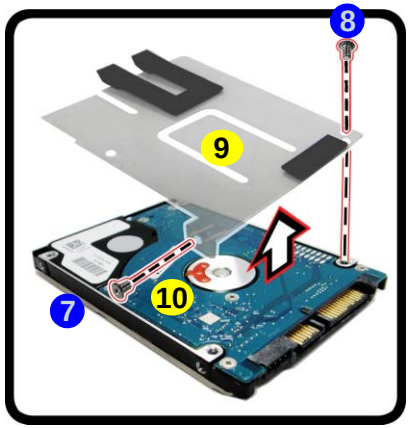

3. Component Bay Cover
6. HDD Assembly
9. Adhesive Cover
10. HDD

- 2 Screws

HDD System Warning

New HDD's are blank. Before you begin make sure:

You have backed up any data you want to keep from your old HDD.

You have all the CD-ROMs and FDDs required to install your operating system and programs.

If you have access to the internet, download the latest application and hardware driver updates for the operating system you plan to install. Copy these to a removable medium.

Hard Disk Size Note (Foam Rubber Insert)

Note that the hard disks pictured on the following pages are all 9.5mm(H) hard disk drives. In some cases 7mm(H) hard disk drives will be installed. For more information contact your distributor/supplier, and bear in mind your warranty terms.

Figure 5
Foam Rubber Insert for 7mm(H) HDDs

- If you are replacing a 9.5mm(H) HDD with a 7mm(H) HDD then insert the foam rubber insert (as shown above).

- If you are replacing a 7mm(H) HDD with a 9.5mm(H) HDD then remove the foam rubber insert.

Figure 6
Optical Device Removal

a. Remove the screws.
b. Remove the component bay cover.
c. Remove the screw at point 5.
d. Use a screwdriver to carefully push out the optical device at point 6.

Removing the Optical (CD/DVD) Device

1. Turn **off** the computer, and remove the battery (*page 2 - 5*).
2. Locate the component bay cover and remove screws 1 - 2 (*Figure 6a*).
3. Remove the component bay cover 3 in the direction of the arrow 4 (*Figure 6b*).
4. Remove the screw at point 5 (*Figure 6c*).
5. Use a screwdriver to carefully push out the optical device 7 at point 6 (*Figure 6d*).

a.

c.

b.

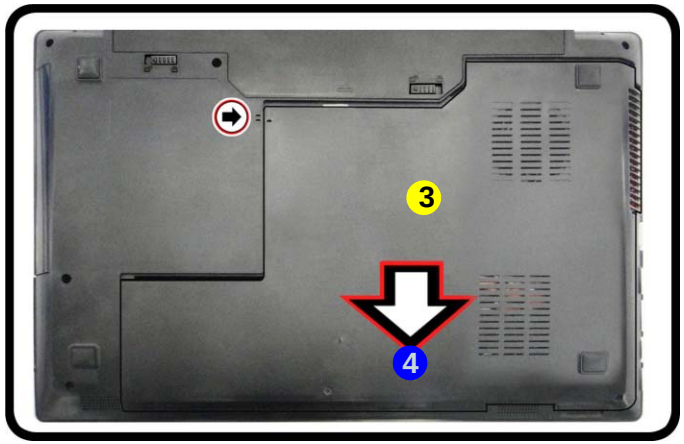

d.

3. Component Bay Cover
7. Optical Device

- 2 Screws

6. Carefully pry the bezel 9 off the optical device at point 8 (*Figure 7e*).
7. Separate the bezel 9 and the optical device.
8. Reverse the process to attach the front bezel 9 with the new optical device at point 10 (*Figure 7g*).
9. Insert the new device and carefully slide it into the computer (the device only fits one way. DO NOT FORCE IT; The screw holes should line up).
10. Replace the bay cover by pushing it at point 11 until the cover and case indicator are aligned, then tighten the screws.
11. Restart the computer to allow it to automatically detect the new device.

Figure 7
Optical Device Removal (cont'd.)

e. Pry the bezel off the optical device.
f. Separate the bezel and optical device
g. Install the front bezel.
h. Replace the component bay cover and screws.

e.

g.

f.

h.

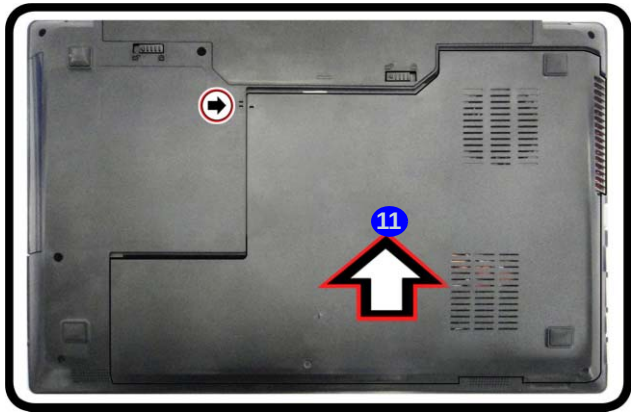

9. Bezel

Figure 8
RAM Module Removal

a. Remove the screws from the component bay cover.
b. Remove the component bay cover. The RAM modules will be visible at point 4 on the mainboard.

Removing the System Memory (RAM)

The computer has two memory sockets for 204 pin Small Outline Dual In-line Memory Modules (SO-DIMM) supporting DDR3L up to 1600 MHz. The main memory can be expanded up to 16GB. The total memory size is automatically detected by the POST routine once you turn on your computer.

Memory Upgrade Process

1. Turn **off** the computer, turn it over, and remove the battery (*page 2 - 5*).
2. Remove screws 1 - 2 from the component bay cover (*Figure 8a*).
3. Carefully remove the bay cover 3 .
4. The RAM modules will be visible at point 4 on the mainboard (*Figure 8b*).

Contact Warning

Be careful not to touch the metal pins on the module's connecting edge. Even the cleanest hands have oils which can attract particles, and degrade the module's performance.

3. Component Bay Cover

- 2 Screws

a.

b.

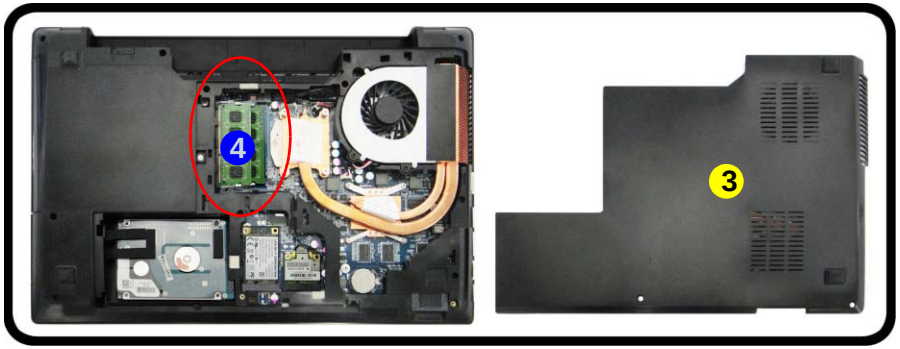

5. Gently pull the two release latches (5 & 6) on the sides of the memory socket in the direction indicated by the arrows (***Figure 9c***). The RAM module 7 will pop-up (***Figure 9d***), and you can then remove it.
6. Pull the latches to release the second module if necessary.
7. Insert a new module holding it at about a 30° angle and fit the connectors firmly into the memory slot.
8. The module will only fit one way as defined by its pin alignment. Make sure the module is seated as far into the slot as it will go. DO NOT FORCE IT; it should fit without much pressure.
9. Press the module in and down towards the mainboard until the slot levers click into place to secure the module.
10. Replace the component bay cover and the screws (see ***page 2 - 12***).
11. Restart the computer to allow the BIOS to register the new memory configuration as it starts up.

Figure 9
RAM Module Removal (cont'd)

c. Pull the release latches.
d. Remove the module.

c.

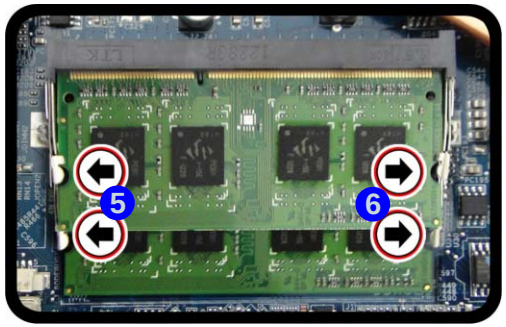

d.

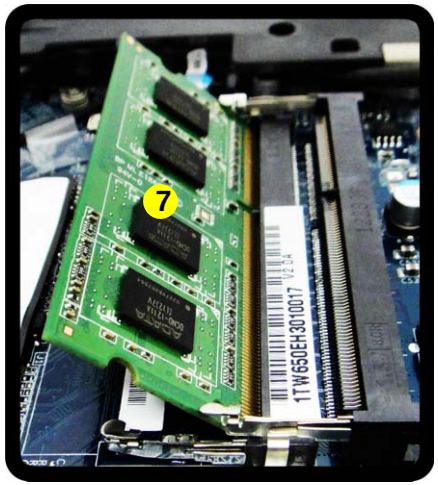

Single Memory Module Installation

If your computer has a single memory module, then insert the module into the **Channel 0 (JDIMM1)** socket. In this case this is the **lower memory socket** (the socket closest to the mainboard).

Contact Warning

Be careful not to touch the metal pins on the module's connecting edge. Even the cleanest hands have oils which can attract particles, and degrade the module's performance.

7. RAM Module

Figure 10
Processor Removal

a. Locate the CPU heat sink.
b. Remove the screws.
c. Carefully remove the heat sink unit.

Removing and Installing a Processor

Processor Removal Procedure

1. Turn **off** the computer, turn it over, remove the battery (***page 2 - 5***) and the component bay cover (***page 2 - 7***).
2. The CPU heat sink will be visible at point A (***Figure 10a***).
3. Loosen the CPU heat sink screws in the order 8, 7, 6, 5, 4, 3, 2 & 1 (the reverse order as indicated on the label (***Figure 10b***).
4. Carefully (it may be hot) remove the heat sink unit B off the computer (***Figure 10c***).

a.

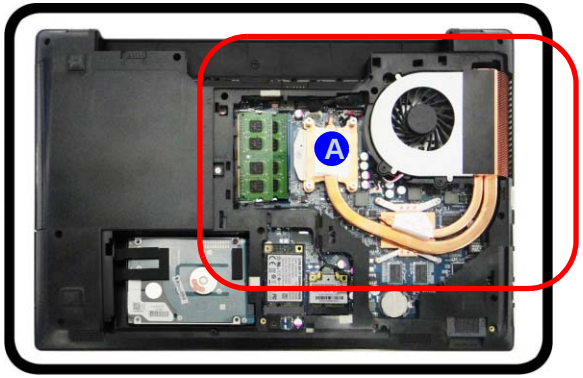

c.

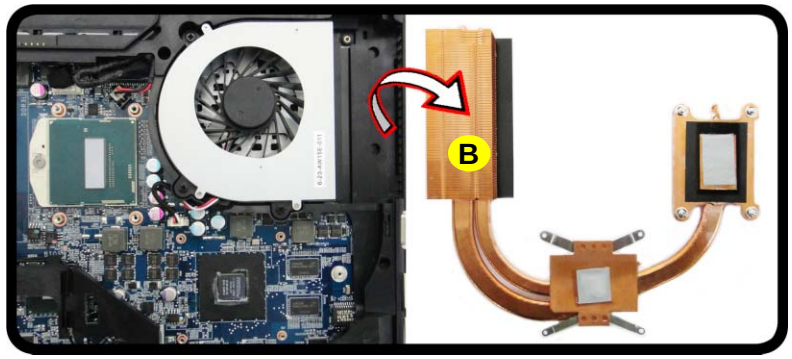

b.

B. Heat Sink

- 8 Screws

5. Turn the release latch C towards the unlock symbol to release the CPU (*Figure 11f*).
6. Carefully (it may be hot) lift the CPU D up and out of the socket (*Figure 11g*).
7. Reverse the process to install a new CPU.
8. When re-inserting the CPU, pay careful attention to the pin alignment, it will fit only one way (DO NOT FORCE IT!)

Figure 11
Processor Removal (cont'd)

d. Turn the release latch to unlock the CPU.
e. Lift the CPU out of the socket.

d.

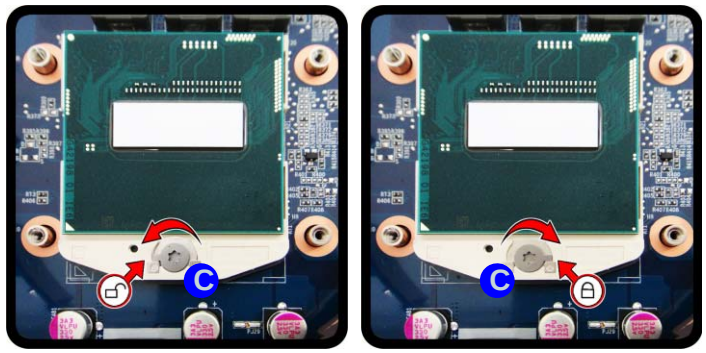

e.

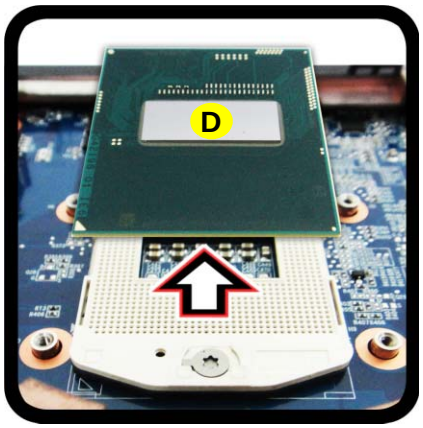

Caution

The heat sink, and CPU area in general, contains parts which are subject to high temperatures. Allow the area time to cool before removing these parts.

D. CPU

Figure 12
Processor Installation

a. Insert the CPU.
b. Turn the release latch towards the lock symbol.
c. Insert the heat sink.
d. Tighten the screws.

Processor Installation Procedure

1. Insert the CPU A (***Figure 12a***), and pay careful attention to the pin alignment; it will fit only one way (DO NOT FORCE IT!), and turn the release latch B towards the lock symbol (***Figure 12b***).
2. **Remove the sticker** C (***Figure 12c***) from the heat sink unit (if it is a new unit).
3. Insert the heat sink D as indicated in ***Figure 12c***.
4. Tighten the CPU heat sink screws in the order 1, 2, 3, 4, 5, 6, 7 & 8 (the order as indicated on the label and ***Figure 12d***).
5. Replace the CPU fan, component bay cover and tighten the screws (***page 2 - 14***).

a.

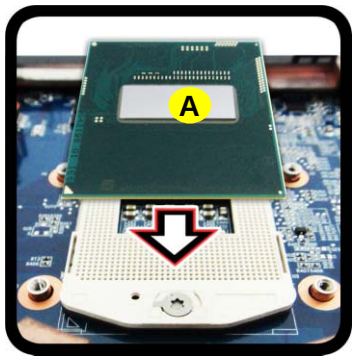

b.

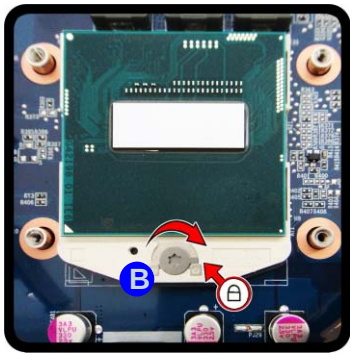

c.

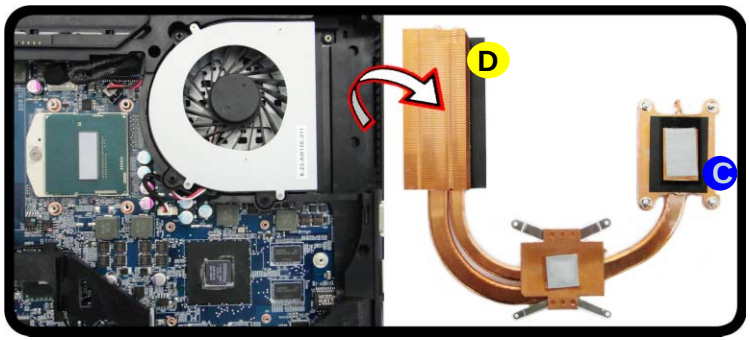

d.

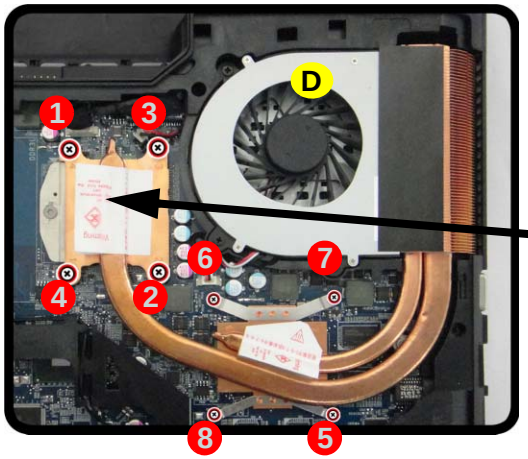

Note:
Tighten the screws in the order as indicated on the label.

A. CPU
D. Heat Sink

- 4 Screws

Removing the Wireless LAN Module

1. Turn **off** the computer, turn it over, remove the battery (***page 2 - 5***) and the component bay cover (***page 2 - 7***).
2. The Wireless LAN module will be visible at point 1 on the mainboard (***Figure 13a***).
3. Carefully disconnect the cables 2 & 3, and then remove the screw 4 (***Figure 13b***)
4. The Wireless LAN module 5 (***Figure 13c***) will pop-up, and you can remove it from the computer.

a.

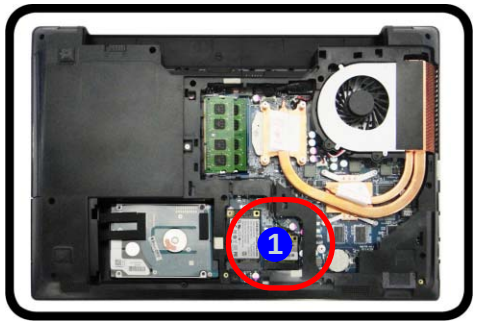

b.

c.

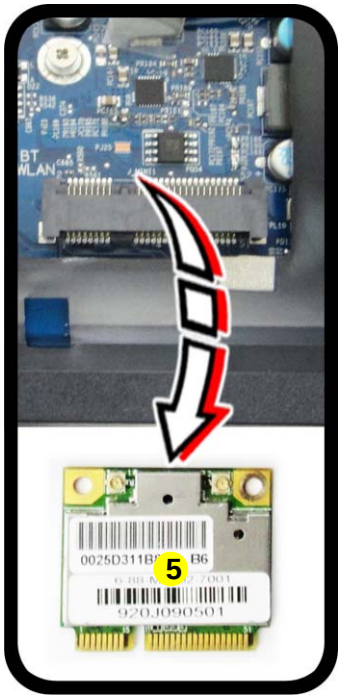

Figure 13
Wireless LAN Module Removal

a. Locate the WLAN.
b. Disconnect the cables and remove the screw.
c. The WLAN module will pop up.

Note: Make sure you reconnect the antenna cable to the "1 + 2" socket (***Figure 13b***).

5.Wireless LAN Module

- 1 Screw

Wireless LAN, Combo, 3G & LTE Module Cables

Note that the cables for connecting to the antennae on WLAN, WLAN & Bluetooth Combo, 3G and LTE modules are not labelled. The cables/covers (each cable will have either a black or transparent cable cover) are color coded for identification as outlined in the table below.

Module Type	Antenna Type	Cable Color	Cable Cover Type
WLAN/WLAN & Bluetooth Combo	WM 1	Black	Transparent
	WM 2	Gray	
	WM 3	White	
LTE Broadband	LTE 1	Black	Black
	LTE 2	Gray	
3G Broadband	3G 1	Black	Black
	3G 2	Gray	

Cable 1 is usually connected to antenna 1 (Main) on the module, and cable 2 to antenna 2 (Aux).

Removing the 3G Module

1. Turn **off** the computer, turn it over, remove the battery (***page 2 - 14***) and the component bay cover (***page 2 - 12***).
2. The 3G module will be visible at point 1 on the mainboard (***Figure 14a***).
3. Carefully remove the screw 2 (***Figure 14b***).
4. Carefully slide the 3G module 3 (in the direction of the arrow 4 - ***Figure 14c***) out of the interface adaptor and then lift it up (do not exceed 10degrees) to remove it from the computer (***Figure 14d***).
5. Carefully remove the screw 5 (***Figure 14e***).
6. The min-card interface adaptor 6 will pop-up, and you can remove it from the computer (***Figure 14f***).

Figure 14
3G Module Removal

a. Locate the 3G module.
b. Remove the screw.
c. Slide the module in the direction of the arrow and lift it out.
d. Remove the 3G module.
e. Remove the screw.
f. Remove the interface adaptor.

3. 3G Module
6.Interface Adaptor

- 2 Screws

Removing and Installing the MSATA Module

MSATA Removal Procedure

1. Turn **off** the computer, remove the battery (***page 2 - 14***), and component bay cover (***page 2 - 7***).
2. Locate the module, it is visible at point 1 (***Figure 15a***).
3. Carefully remove the screw 2 from the module (***Figure 15b***).
4. Lift the module 3 up and off the computer (***Figure 15c***).

Figure 15
MSATA Module Removal

a. Locate the module.
b. Remove the screw.
c. The module will pop-up.
d. Lift the module up off the socket.

a.

b.

c.

d.

3. MSATA Module

- 1 Screw

MSATA Installation Procedure

1. Place the thermal pad 1 as shown (***Figure 16a***).
2. Insert the module 2 in the computer (***Figure 16b***).
3. Tighten the screw 3 to secure it in place (***Figure 16c***).

Figure 16
MSATA Module Installation

a. Place the thermal pad.
b. Insert the module.
c. Tighten the screw.

a.

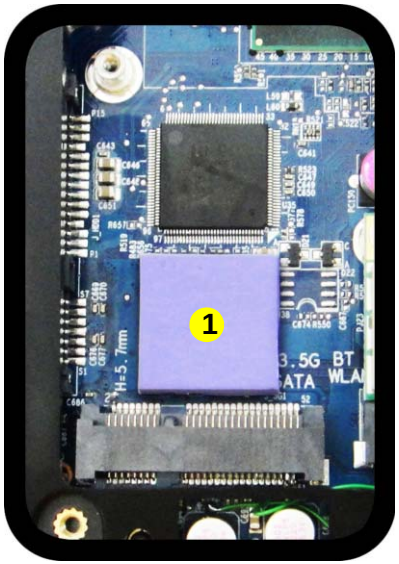

b.

c.

1. Thermal Pad
2. MSATA Module

- 1 Screw

Figure 17
CCD Removal

a. Run your fingers around the inner frame of the LCD panel at the points indicated by the arrows.
b. Lay the computer down on a flat surface with the top case up forming a 90 degree angle. Push the LCD front panel upwards before carefully lifting it up.
c. Remove the LCD front cover.

Removing the CCD

1. Turn **off** the computer, turn it over, and remove the battery (*page 2 - 14*).
2. Run your fingers around the inner frame of the LCD panel at the points as indicated by the arrows 1 - 4 .
3. Lay the computer down on a flat surface with the top case up forming a 90 degree angle. Push the LCD front cover 5 upwards before carefully lifting it up (*Figure 17b*).
4. Remove the LCD front cover 5 (*Figure 17c*).

a.

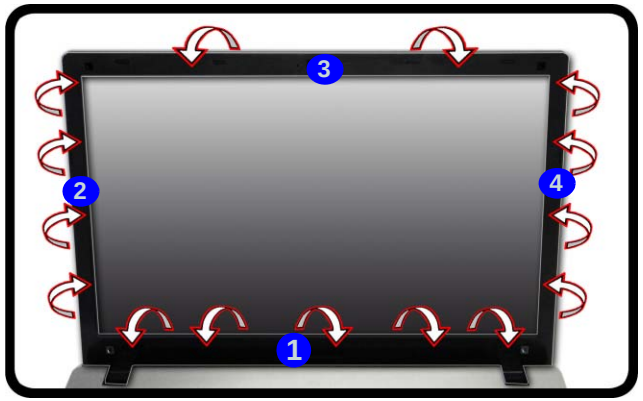

b.

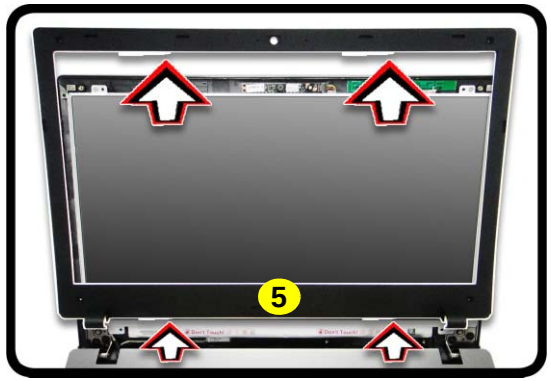

c.

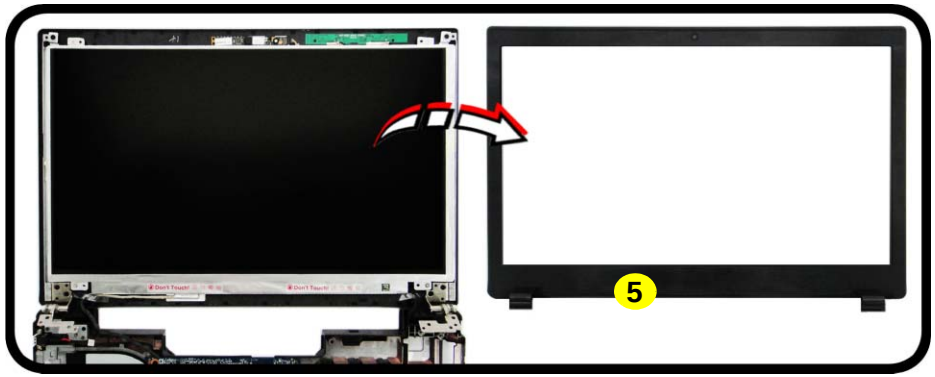

5. LCD Front Cover

5. Disconnect the cable 6 (*Figure 18d*).
6. Remove the CCD module 7 (*Figure 18e*).
7. Reverse the process to install a new CCD module.

d.

e.

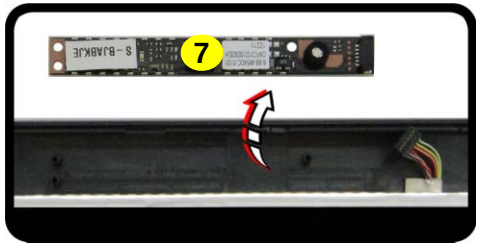

Figure 18
CCD Removal (cont'd)

d. Disconnect the cable.
e. Remove the CCD module.

7. CCD Module

Appendix A:Part Lists

This appendix breaks down the ***W650SC*** series notebook's construction into a series of illustrations. The component part numbers are indicated in the tables opposite the drawings.

Note: This section indicates the *manufacturer's* part numbers. Your organization may use a different system, so be sure to cross-check any relevant documentation.

Note: Some assemblies may have parts in common (especially screws). However, the part lists DO NOT indicate the total number of duplicated parts used.

Note: Be sure to check any update notices. The parts shown in these illustrations are appropriate for the system at the time of publication. Over the product life, some parts may be improved or re-configured, resulting in *new* part numbers.

Part List Illustration Location

The following table indicates where to find the appropriate part list illustration.

Table A - 1
Part List Illustration Location

Part	
Top	*page A - 3*
Bottom	*page A - 4*
DVD Dual Drive	*page A - 5*
HDD	*page A - 6*
2nd HDD	*page A - 7*
LCD	*page A - 8*

Top

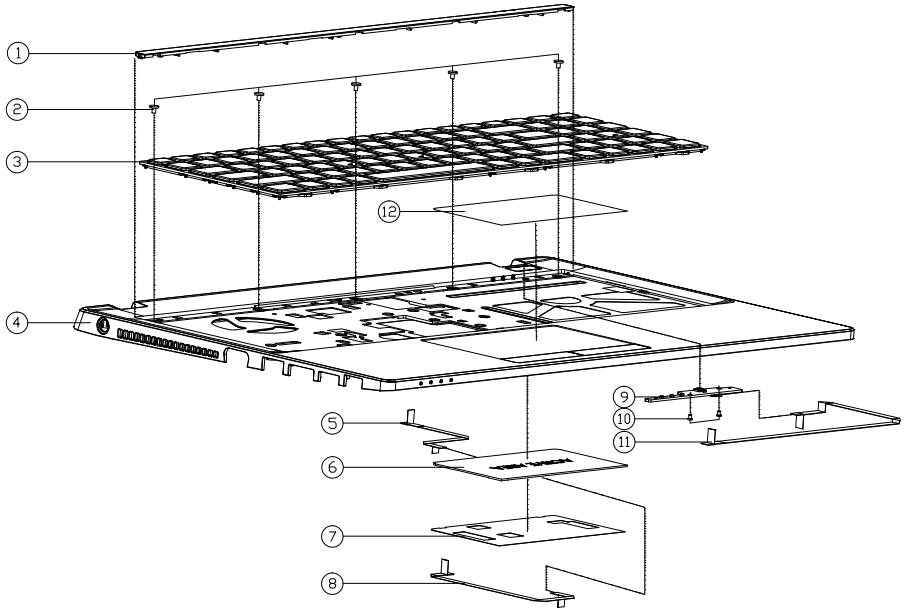

Figure A - 1
Top

ITEM	PART NAME	PART NO	REMARK
1	KB COVER PC+ABS W650SR	6-42-W6502-043	
2	SCREW M2*2.5L KI BK/Z ICT NY 1# Ø3.5 T=0.5	6-35-B6120-2RD	
3	WIN8 K/B KIT(EXBLACK)& FRAME (US) MODULE W650SJ/W650SC	6-79-W650SBOK-110-W	
4	TOP CASE MODULE W650SR(CHANGE)	6-39-W6502-015	
5	FFC CABLE FOR TP_CN1 TO MB 4PIN (CNJS) W650SR	6-43-W6500-021-1	
6	TOUCH PAD ELAN SA055D-6200 W650EH	6-49-W65E3-010	
7	TOUCH PAD MYLAR (100*55.2*0.1ST) BLACK PET+SM55+G4000 W650SR	6-40-W6502-024	
8	FFC CABLE FOR TP_CN2 TO MB 4PIN (CNJS) W650SR	6-43-W6500-031-1	
9	POWER SWITCH BOARD V5.0 W650SJ	6-77-W650S-D05-B	
10	SCREW M2*3L KI NI ICT NY (DD=Ø4.5,DT=0.4)	6-35-B1120-3RE	
11	FFC CABLE FOR POWER BOARD TO MB 10PIN (CNJS) W650SR	6-43-W6500-011-1	
12	TOUCH PAD MYLAR FOR W650SH	6-40-W65S2-010	

Bottom

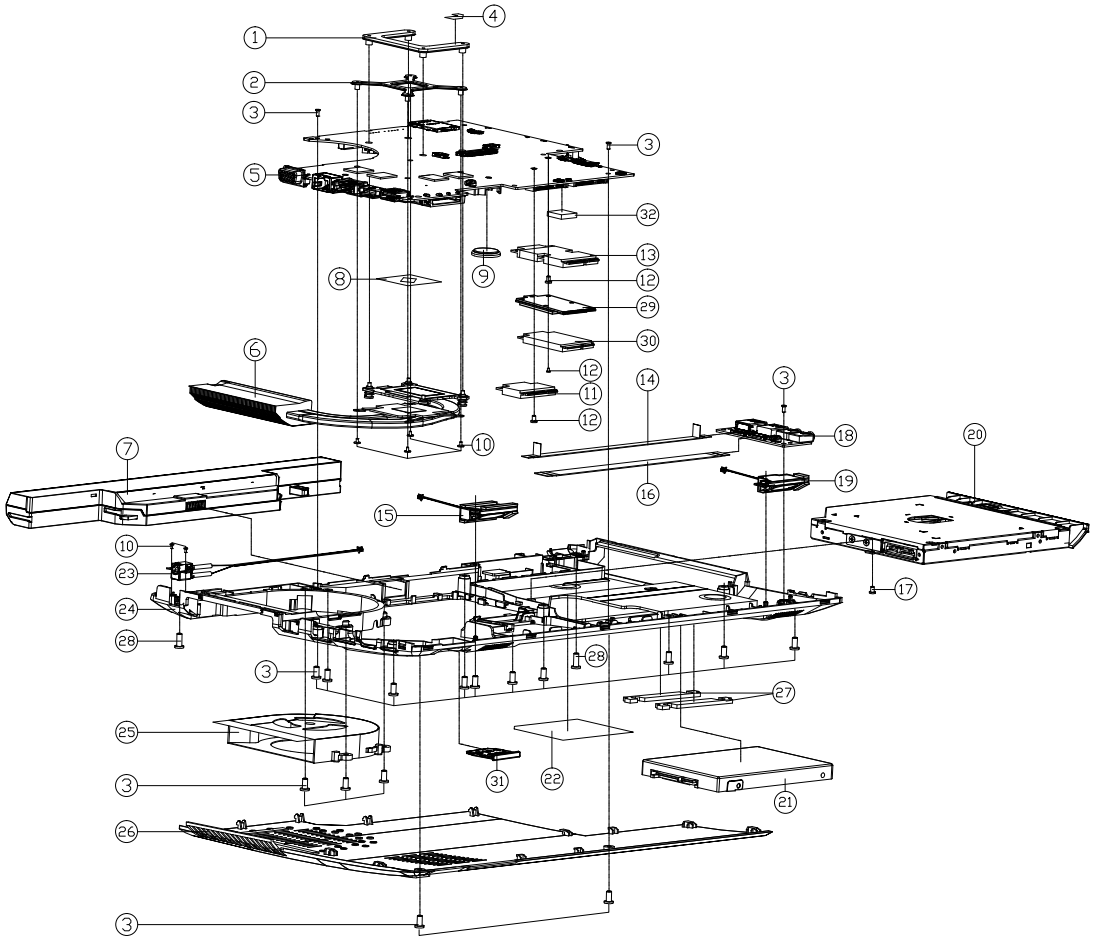

Figure A - 2
Bottom

ITEM	PART NAME	PART NO	REMARK
1	CPU SUPPORT BRACKET SECC T=1.5 P150HM	6-33-X510S-011	
2	VGA SUPPORTER SUS430 W650SH	6-33-W650S-010	FOR W650SH
3	SCREW M2.5*6L K BZ ICT NY	6-35-82125-6RA	
4	GASKET (22*13.5*0.15T) FOR MB W650SR	6-47-00190-220	
5	MAIN BOARD V2.0 (D-MIC / EDP)XW/O TPM,3D W650SB	6-77-W650SB00-D02-3	
5	MAIN BOARD V2.0 (D-MIC / LVDS)XW/TPM,3D W650SB	6-77-W650SB00-D02-4	
5	MAIN BOARD V2.0 (D-MIC / EDP)XW/TPM,3D W650SC	6-77-W650SC00-D02	
5	MAIN BOARD V2.0 (D-MIC / LVDS)XW/O TPM,3D W650SC	6-77-W650SC00-D02-7	
6	CPU HEATSINK MODULE W650SR(FU RUD)	6-31-W650N-101-1	
7	[illegible]	6-87-W650S-4D7A2	(OPTION)
7	[illegible]	6-87-W650S-4D4A2	(OPTION)
7	[illegible]	6-87-W650S-4D4A3	(OPTION)
7	[illegible]	6-87-W650S-4D7A3	(OPTION)
8	CPU MYLAR (DK=DM=27.0,KT=0.1) PET+MET10 3000MC FOR M05-G1 W650SF	6-40-W650S-020	FOR W65XSB
8	VGA CHIP MYLAR 30K3D M09F-GE2 M960TU(新中源)	6-40-M860S-091	FOR W65XSC
9	BATTERY 3V 220MA BR8CR2032B (KTS)	6-23-6A2B2-030	
10	SCREW M1.6*3.5L KCT=12 D=4.5) BZ ICT NY	6-35-82116-3R5	
11	[illegible]	6-88-P6502-4240	(OPTION)
11	[illegible]	6-88-P6502-4270	(OPTION)
11	[illegible]	6-88-P6502-4280	(OPTION)
11	[illegible]	6-88-W54SF-9400	(OPTION)
11	[illegible]	6-88-P3702-9400	(OPTION)
12	SCREW M2*3L KI NI ICT NY (OD=4.5,DT=0.4)	6-35-B1120-3RE	(OPTION)
13	MSATA3 SSD 128GB MLC SSDMCEAW128A4XX INTEL 530 SERIES	6-85-D40C0-Z01	(OPTION)
13	MSATA3 SSD 240GB MLC SSDMCEAW240A4XX INTEL 530 SERIES	6-85-D40Q0-Z01	(OPTION)
13	MSATA3 SSD 240GB MLC CT240M500SSD3 CRUCIAL M5 SERIES	6-85-D40Q0-100	(OPTION)
13	SSD MSATA 512GB CRUCIAL CT512M550SSD3 M550 (SATA3 6GB/S)	6-85-D405B-100	(OPTION)
14	FFC CABLE FOR MB TO AUDIO BOARD 12PIN (ONLY) W650SR	6-43-W6500-043-1	
15	SPK+CABLE L 40MM (P2512KN2041) 2V 4? W670SCQ	6-23-5W67C-0L1	
16	FFC CABLE MB TO AUDIO BOARD 22PIN (ONLY) W650EH	6-43-W65E0-023-1	
17	SCREW M2*3L KI NI ICT NY (OD=4.5,DT=0.4)	6-35-B1120-3RE	
18	AUDIO BOARD V7.0 W650SJ	6-77-W6508-D07	
19	SPK+CABLE R 50MM (P2512KN5041) 2V 4? W670SCQ	6-23-5W67C-0R1	
20	W/O 2ND HDD ASS'Y W650SJ	6-79-W650SJ0J-020	(OPTION)
20	W/ 2ND HDD ASS'Y W650SR	6-79-W650SR0J-020	
20	W/O ODD ASS'Y W655SJF	6-79-W655SJFZ-000	
20	SATA DVD SUPER MULTI 8X ASS'Y W655SB	6-79-W655SB0Q-001	
21	W/O HDD ASS'Y W650SJ	6-79-W650SJ0J-010	
21	W/HDD ASS'Y W650EH	6-79-W650EH0J-020	
22	PRODUCT LABEL FOR W655SB	6-45-W655SB03-010	
22	PRODUCT LABEL FOR W650SB	6-45-W650SB03-010	
22	PRODUCT LABEL FOR W650SC	6-45-W650SC03-010	
22	PRODUCT LABEL FOR W655SC	6-45-W655SC03-010	
23	[illegible]	6-43-W15E0-040-2	
24	BOTTOM CASE MODULE W650SR	6-39-W6503-016	
25	FAN+CON 79*23MM 5V 0.4A 3SB09M ASTM5M-BC3 ABM W560DQ	6-23-AW15E-011	
26	CPU COVER MODULE(CHANGE)W650SR	6-42-W6508-105	
27	SPONGE (76.4*12*2.5T) CR4285 FOR 7MM HDD W540EU	6-47-0019A-763	For 7mm HDD Only
28	SCREW M2.5*8L KI BK/Z NY ICT	6-35-B6125-8R0	
29	MINI PCIE TO NGFF CARD FOR 3G (MEMO V1.0	6-77-W84AG-D01	
30	[illegible]	6-88-S210W-8810	(OPTION)
30	[illegible]	6-88-W3306-8830	(OPTION)
30	[illegible]	6-88-W3306-8841	(OPTION)
31	RUBBER 3IN1 PUSH PUSH TYPE PC+ABS (7.2*3.2*2.7MM) W590SJW	6-42-W9708-020	
32	THERMAL PAD NA500 (17*17*4.0mm) W650SR	6-48-W6503-010	

DVD DUAL

Figure A - 3
DVD DUAL

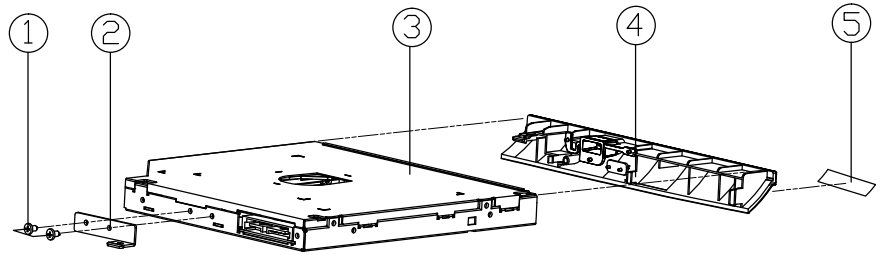

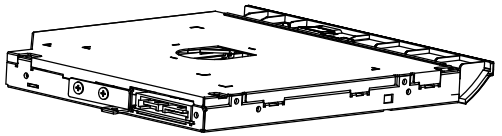

ITEM	PART NAME	PART NO	REMARK
1	(非耐落)SCREW M2*3L K1 NI ICT GTY-PATCH	6-35-B1120-3RE	
2	ODD BRACKET SECC W860CU	6-33-W860Z-010	
3	SATA DVD SUPER MULTI 5 1/4" 8X 12/8X DS-8A8SH 40/W 8X F/WACGD 0/BOOKS 0, ZERO POWER PLDS	6-85-A078X-L09	FOR PLDS
3	SATA DVD SUPER MULTI 5 1/4" 8X 12/8X DS-2B0 40/W & VERIFY F/W TOOD 0/BOOKS 0, ZERO POWER TSST	6-85-A078X-T14	FOR TSST
4	ODD BEZEL MODULE W655SRF	6-42-W655Z-101	
5	SUPER MULTI ODD BEZEL LABEL (SIZE CHANGE)	6-45-W860Q-012	

HDD

Figure A - 4
HDD

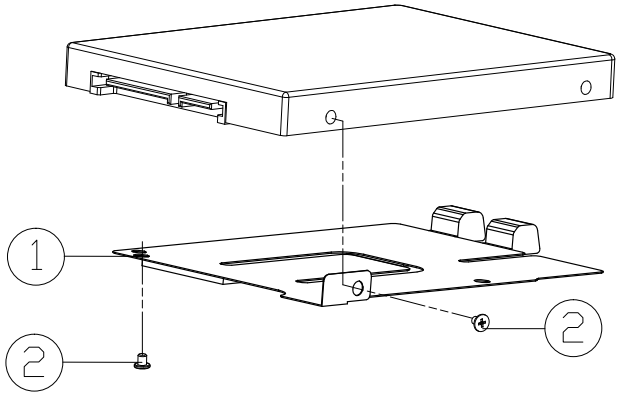

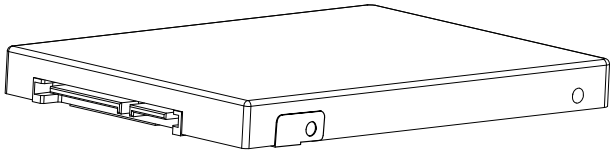

ITEM	PART NAME	PART NO	REMARK
1	HDD MYLAR PET+RUBBER W650SR	6-47-W650J-012	
2	SCREW M3*2.5L KI NI ICT NY	6-35-B1130-2R5	

2nd HDD

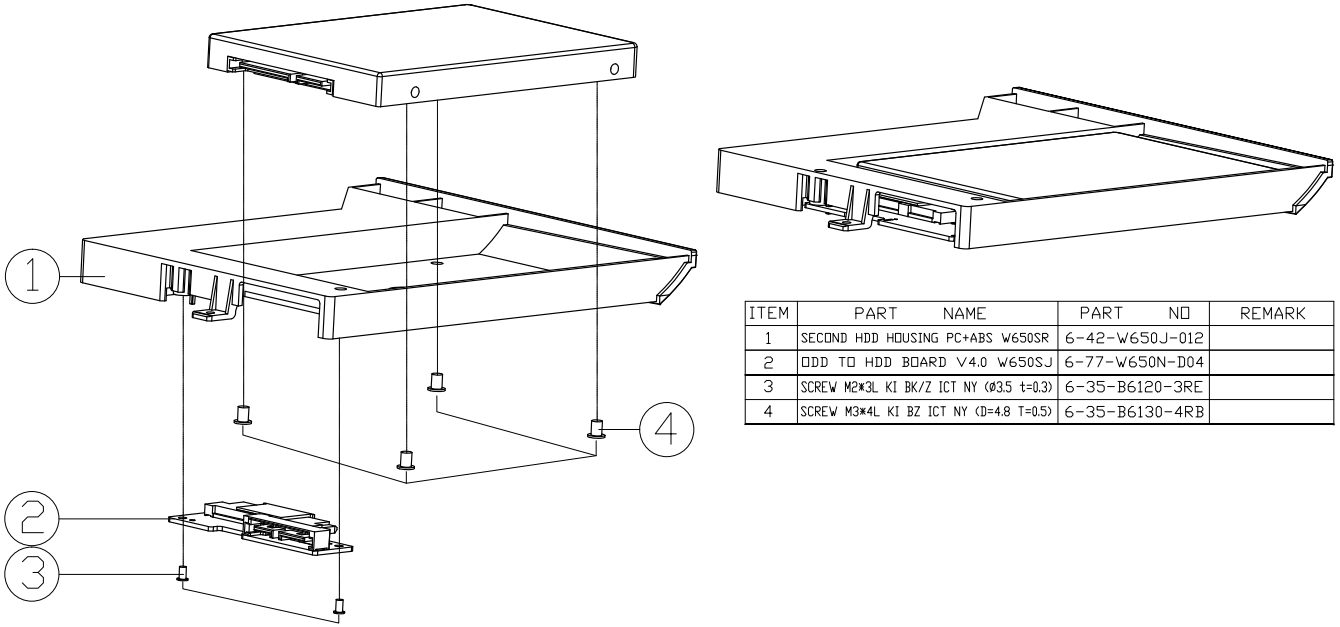

ITEM	PART NAME	PART NO	REMARK
1	SECOND HDD HOUSING PC+ABS W650SR	6-42-W650J-012	
2	ODD TO HDD BOARD V4.0 W650SJ	6-77-W650N-D04	
3	SCREW M2*3L KI BK/Z ICT NY (Ø3.5 t=0.3)	6-35-B6120-3RE	
4	SCREW M3*4L KI BZ ICT NY (D=4.8 T=0.5)	6-35-B6130-4RB	

Figure A - 5
2nd HDD

LCD

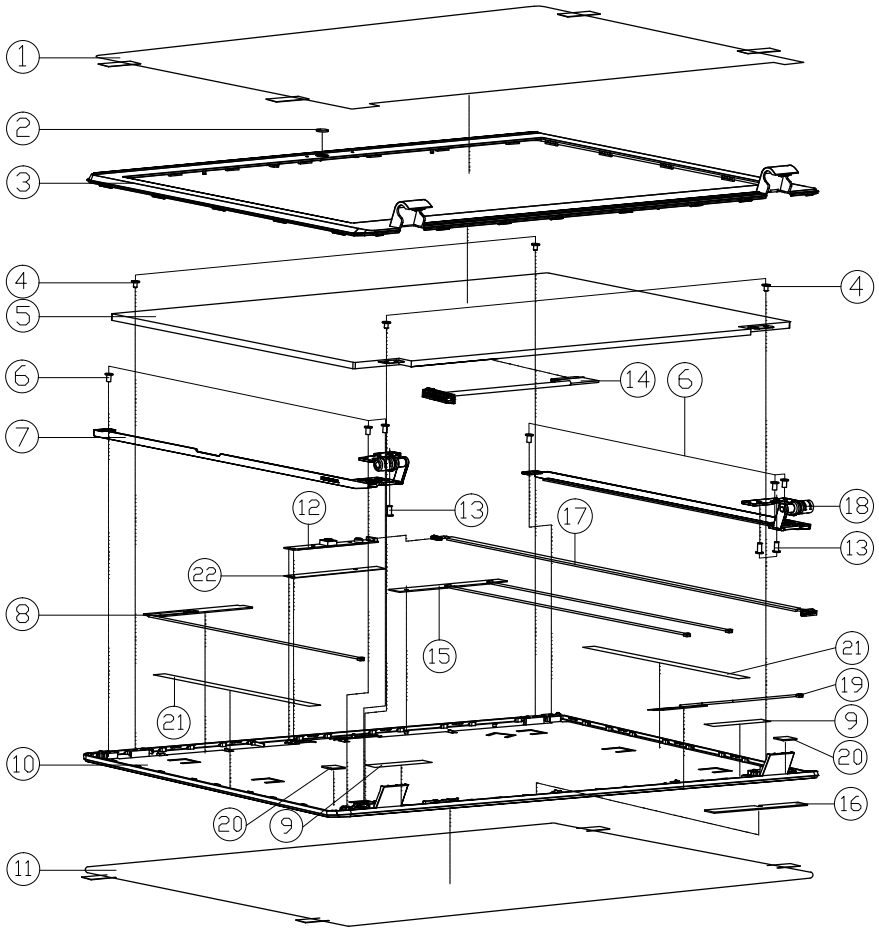

Figure A - 6
LCD

ITEM	PART NAME	PART NO	REMARK
1	LCD FRONT COVER PROTECTION MYLAR (SH715+3M8915) E51Q1Q	6-40-E51Q1-030-1	
2	CCD LENS PMMA W650SR	6-42-W6501-010	
3	LCD FRONT COVER MODULE W650SR	6-39-W6501-017	
4	SCREW M2*3L KI NI ICT NY (DD=Ø4.5,DT=0.4)	6-35-B1120-3RE	
5	LCD 15.6" HD LG LP156WHB-TLB1 (LED) 3.8 MM	6-50-L8138-L08	OPTION
5	LCD 15.6" HD EDP GLARE TYPE) BOE NT156WHM-N12 3.8 MM (LED)	6-50-L8138-Z00	OPTION
5	LCD 15.6" FHD CHIMEI N156HGE-L81 V.0 (GLARE TYPE) (LED) 3.2 MM	6-50-LB232-D02	OPTION
5	LCD 15.6" FHD EDP BOE HB156FH1-401 (LED) 3.2 MM	6-50-LB232-Z00	OPTION
6	SCREW M2.5*4L KI(T=0.5 D=4.5) BK/Z ICT	6-35-B6125-4R0	
7	LCD HINGE L (SK7+SECC) W650SR (WAN HE)	6-33-W6501-0L4-1	
8	ANTENNA 3G+LTE IPEX 4 WGT PCB FPA 0.76/105/105/105/105/215/250MM L=600MM W650SC	6-23-7W65S-010	
9	TAPE MYLAR (B),MYLAR M550J	6-40-M55J2-020	
10	LCD BACK COVER MODULE W650SR	6-39-W6501-025	
11	LCD BACK COVER PROTECTION MYLAR (PET+3M8915) (CHANGE)W650SR	6-40-W6508-012	
12	UVC CAMERA RESIN FIX INOVEN7-310 IN HD HYNIX 1.3M V7401U FW668 W/LED W/O-MIC	6-88-W940C-4902	OPTION
12	UVC CAMERA CHICONY FIX CNF1866 IN HD SETI STDT V5401U FW665 W/LED W/O-MIC	6-88-W940C-5100	OPTION
12	UVC CAMERA RESIN FIX INOVA6VTI-B00 2M FHD OV2724 A0100 FW895 W/O-MIC W/LED	6-88-A11SC-4900	OPTION
13	SCREW M2.5*6L K BZ ICT NY	6-35-82125-6RA	
14	WIRE CABLE FOR LVDS FOR FHD (DUAL) 270MM GL/L/V CONL:VI0348-22C-HF) W650EH	6-43-W65E1-021-N	
14	WIRE CABLE FOR LVDS FOR HD (SINGLE) 270MM GL/L/C CONL:NC40050L-HF) W650EH	6-43-W65E1-011-L	
14	WIRE CABLE FOR EDP FOR FHD (CIP PANEL) 280MM GL/L/V CONL:VI0330-22C-HF) W650SR	6-43-W6501-010-N	
15	ANTENNA WIMA COMBO WGT WIFI+BT PCB H=1.6MM 2.4G/2.5GHZ/5G MHF-600MM MHF-600MM W650SR	6-23-7W650-030	
16	BACK COVER SPONGE (65*8*2) EC-28 W650SR	6-47-0019A-655	
17	WIRE CABLE FOR CCD+D-MIC 3.3V 8PIN 510MM (HL) W650SJ	6-43-W65JT-010	
18	LCD HINGE R (SK7+SECC) W650SR (WAN HE)	6-33-W6501-0R4-1	
19	ANTENNA 3G+LTE2 IPEX 4 WGT PCB FPA 0.76/105/105/105/135/215/250MM L=150MM W650C	6-23-7W65S-020	
20	GASKET TAPE (17*12*0.1T) FOR BOTTOM CASE W130HU	6-47-00190-17B	
21	FRONT COVER GLUE L&R (120*3*0.15) FOR W550EU	6-40-W5401-041	BY 客製化
22	GASKET (43*9*0.6T) FOR 1M CCD W650SJ	6-47-00190-432	FOR 6-88-W940C-5100 6-88-W940C-4902
22	GASKET (43*9*0.25T) FOR 2M CCD W650SJ	6-47-00190-433	FOR 6-88-A11SC-4900

Appendix B: Schematic Diagrams

This appendix has circuit diagrams of the ***W650SC*** notebook's PCB's. The following table indicates where to find the appropriate schematic diagram.

Diagram - Page	Diagram - Page	Diagram - Page
System Block Diagram - Page B - 2	*VGA I/O - Page B - 18*	*HDD, TP, Audio, USB - Page B - 34*
Processor 1/7-DMI, FDI, PEG - Page B - 3	*VGA NVVDD Decoupling - Page B - 19*	*HDMI, RJ45, Fan, KBC, LED - Page B - 35*
Processor 2/7- CLK, MISC - Page B - 4	*CRT - Page B - 20*	*AUDIO CODEC VT1802S - Page B - 36*
Processor 3/7- (DDR3) - Page B - 5	*Lynx 1/9 - Page B - 21*	*KBC-ITE IT8587 - Page B - 37*
Processor 4/7- Power - Page B - 6	*Lynx 2/9 - Page B - 22*	*5VS, 3VS, 3.3V, 5V - Page B - 38*
Processor 5/7- GFX PWR - Page B - 7	*Lynx 3/9 - Page B - 23*	*1.05V - Page B - 39*
Processor 6/7- GND - Page B - 8	*Lynx 4/9 - Page B - 24*	*VDD3, VDD5 - Page B - 40*
Processor 7/7- RSVD - Page B - 9	*Lynx 5/9 - Page B - 25*	*1.5V or 1.35V / 0.75VS, 1.5VS - Page B - 41*
DDR3 SO-DIMM_1 - Page B - 10	*Lynx 6/9 - Page B - 26*	*POWER VCORE - Page B - 42*
DDR3 SO-DIMM_2 - Page B - 11	*Lynx 7/9 - Page B - 27*	*N16P/S, NVVDD, PEX, FBVDDQ - Page B - 43*
PS8625 - Page B - 12	*Lynx 8/9 - Page B - 28*	*DC IN, CHARGER - Page B - 44*
PANEL, INVERTER - Page B - 13	*Lynx 9/9 - Page B - 29*	*AUDIO BOARD - Page B - 45*
VGA PCI-E Interface - Page B - 14	*Mini PCIE, Fan Con - Page B - 30*	*POWER SWITCH BOARD - Page B - 46*
VGA Frame Buffer Interface - Page B - 15	*USB Charge, CCD, TPM, Power Con - Page B - 31*	*ODD to HDD BOARD - Page B - 47*
VGA Frame Buffer A - Page B - 16	*eSATA/USB3.0, LED - Page B - 32*	
VGA Frame Buffer C - Page B - 17	*Card Reader (RTL8411B) - Page B - 33*	

Table B - 1
SCHEMATIC DIAGRAMS

Version Note

The schematic diagrams in this chapter are based upon version 6-7P-W65S4-002. If your mainboard (or other boards) are a later version, please check with the Service Center for updated diagrams (if required).

System Block Diagram

Sheet 1 of 46
System Block Diagram

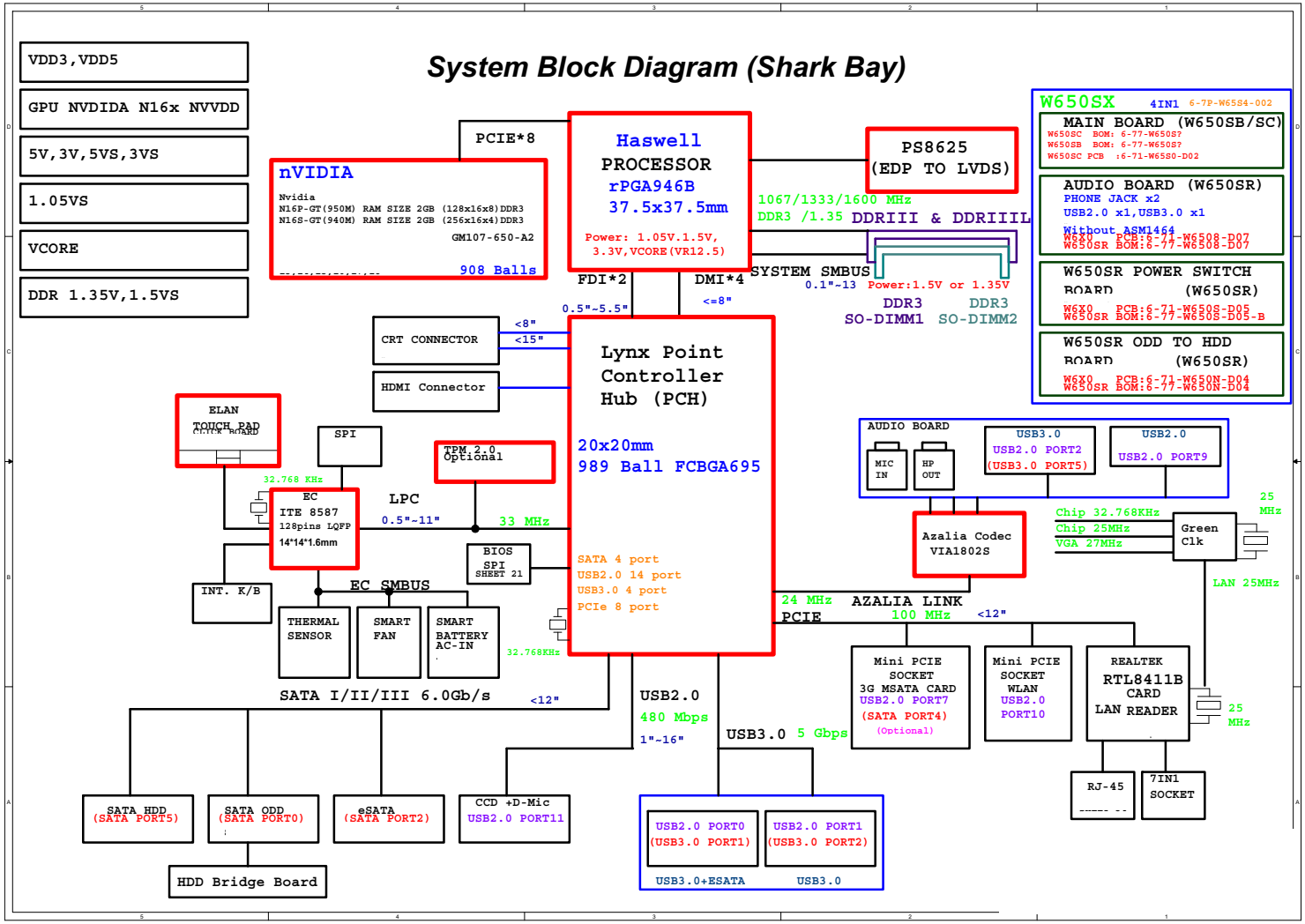

Processor 1/7-DMI, FDI, PEG

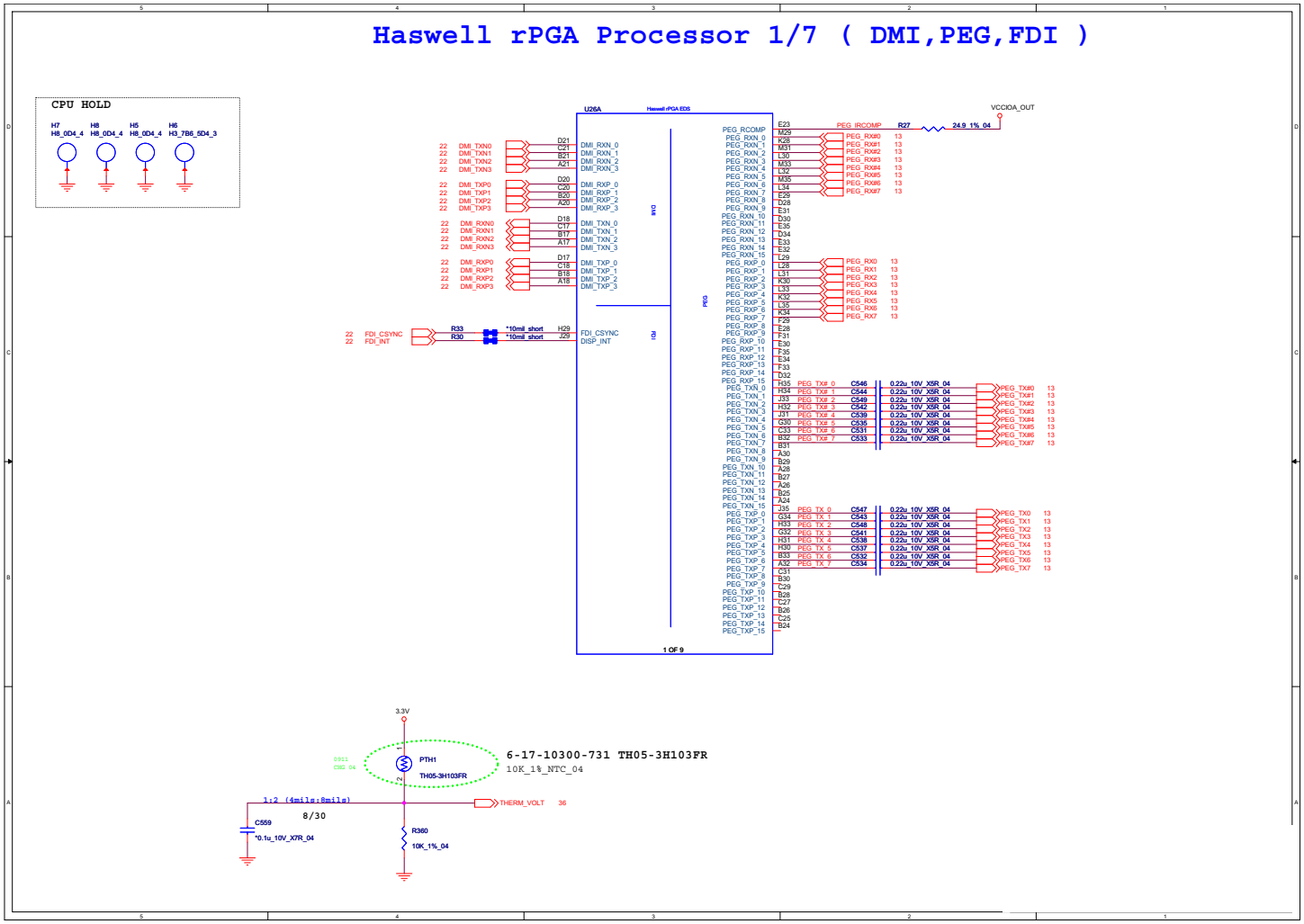

Sheet 2 of 46
Processor 1/7-DMI, FDI, PEG

Processor 2/7- CLK, MISC

Sheet 3 of 46
Processor 2/7-CLK, MISC

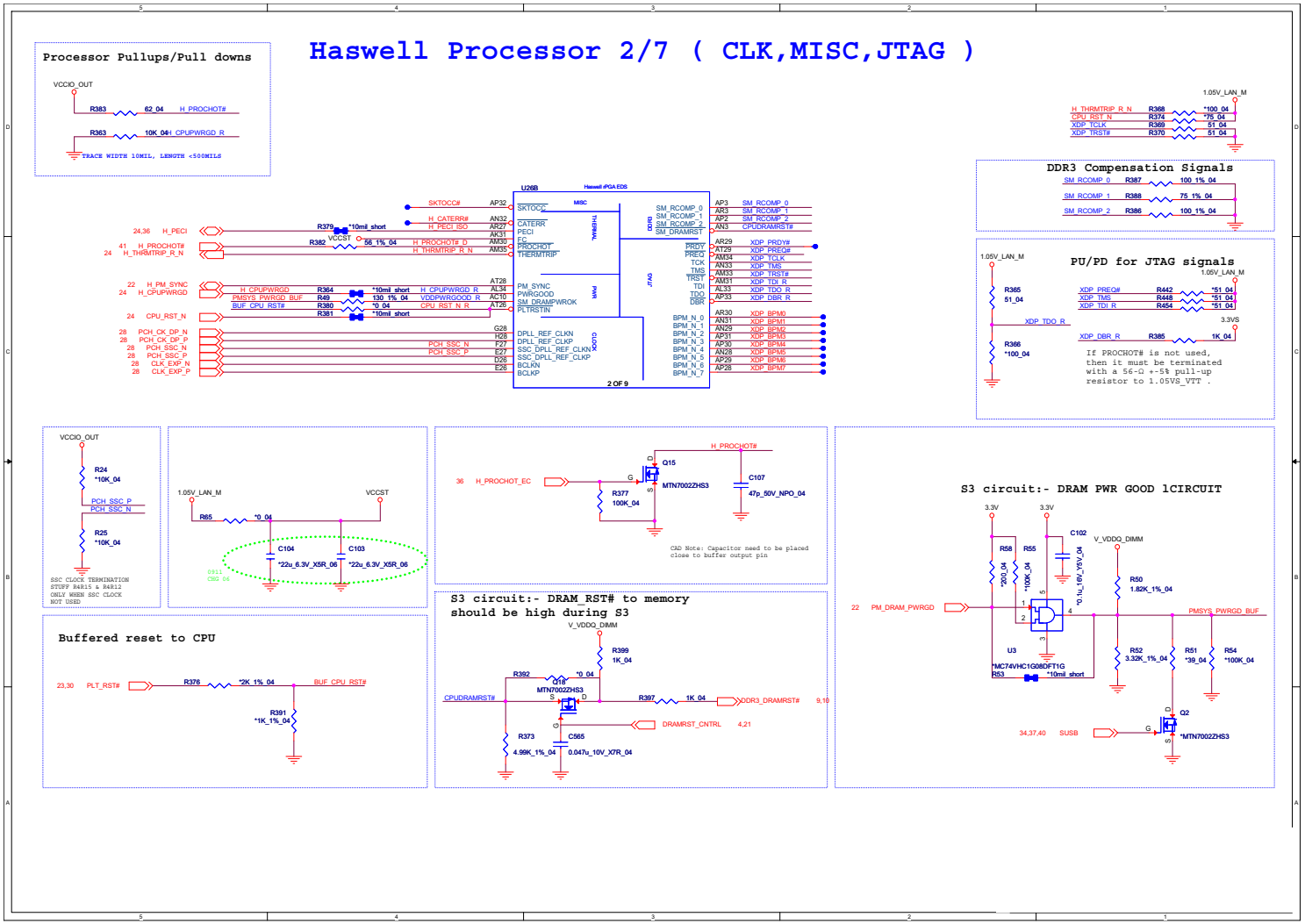

Processor 3/7- (DDR3)

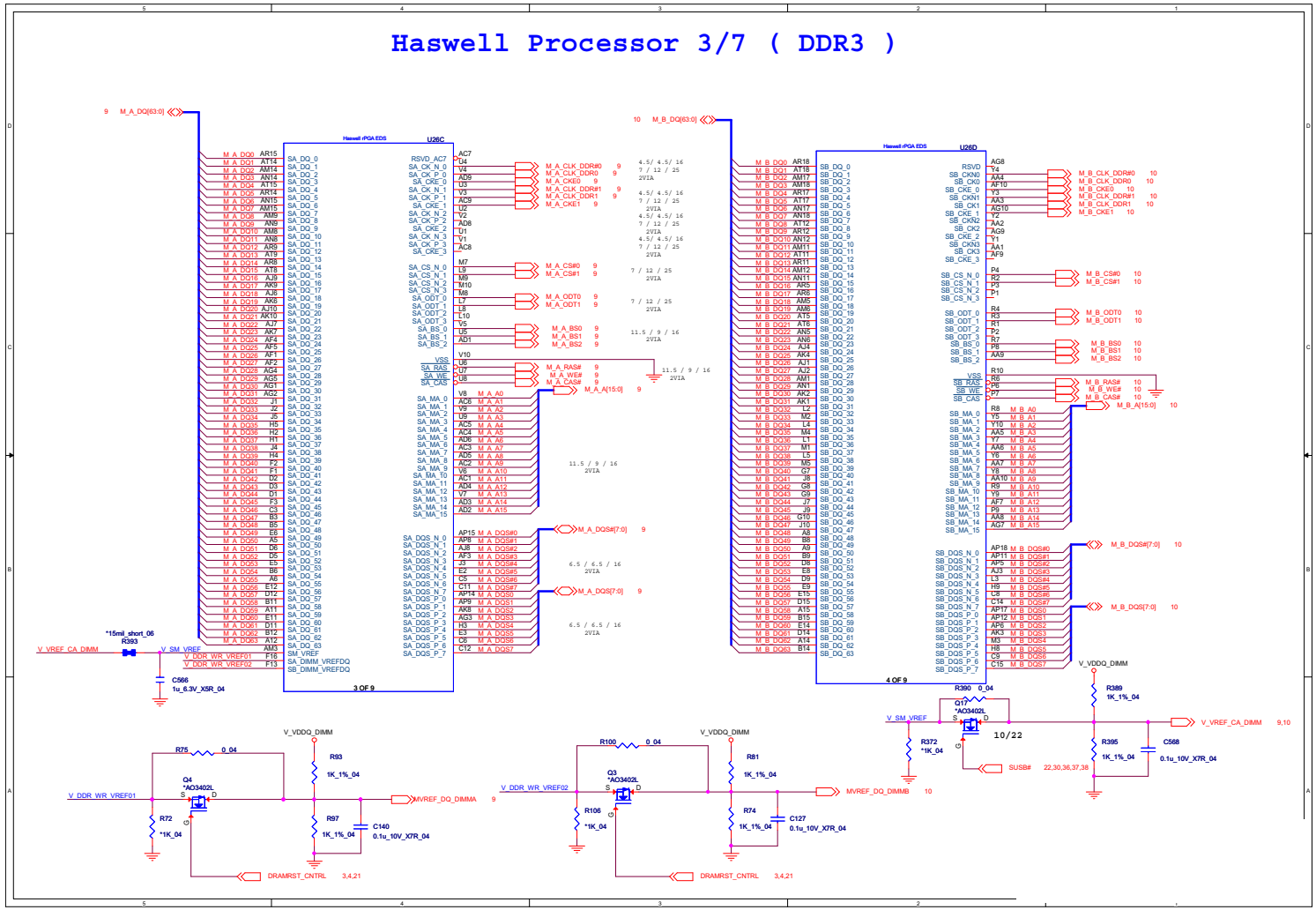

Sheet 4 of 46
Processor 3/7- (DDR3)

B.Schematic Diagrams

Processor 4/7- Power

Sheet 5 of 46
Processor 4/7-Power

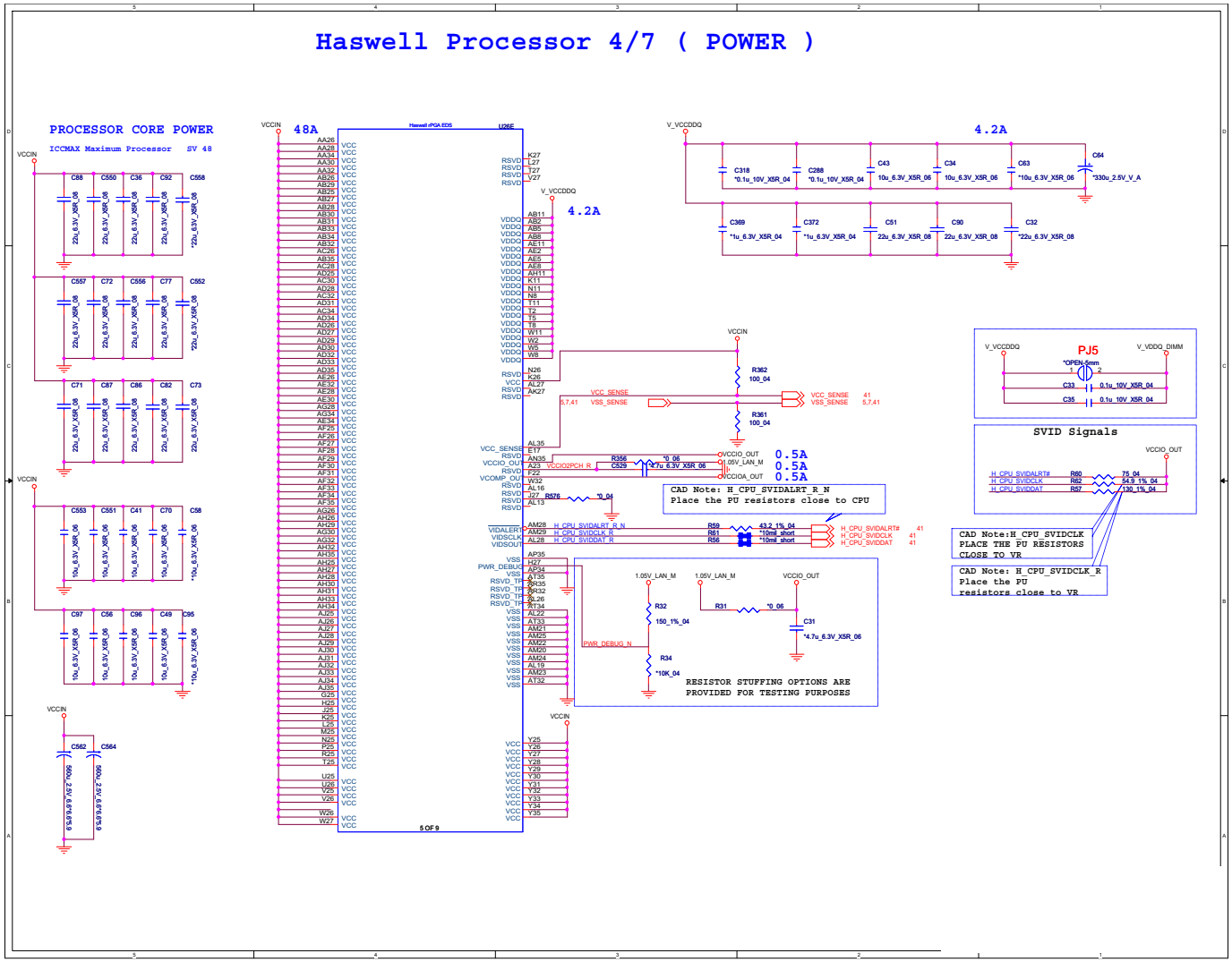

Processor 5/7- GFX PWR

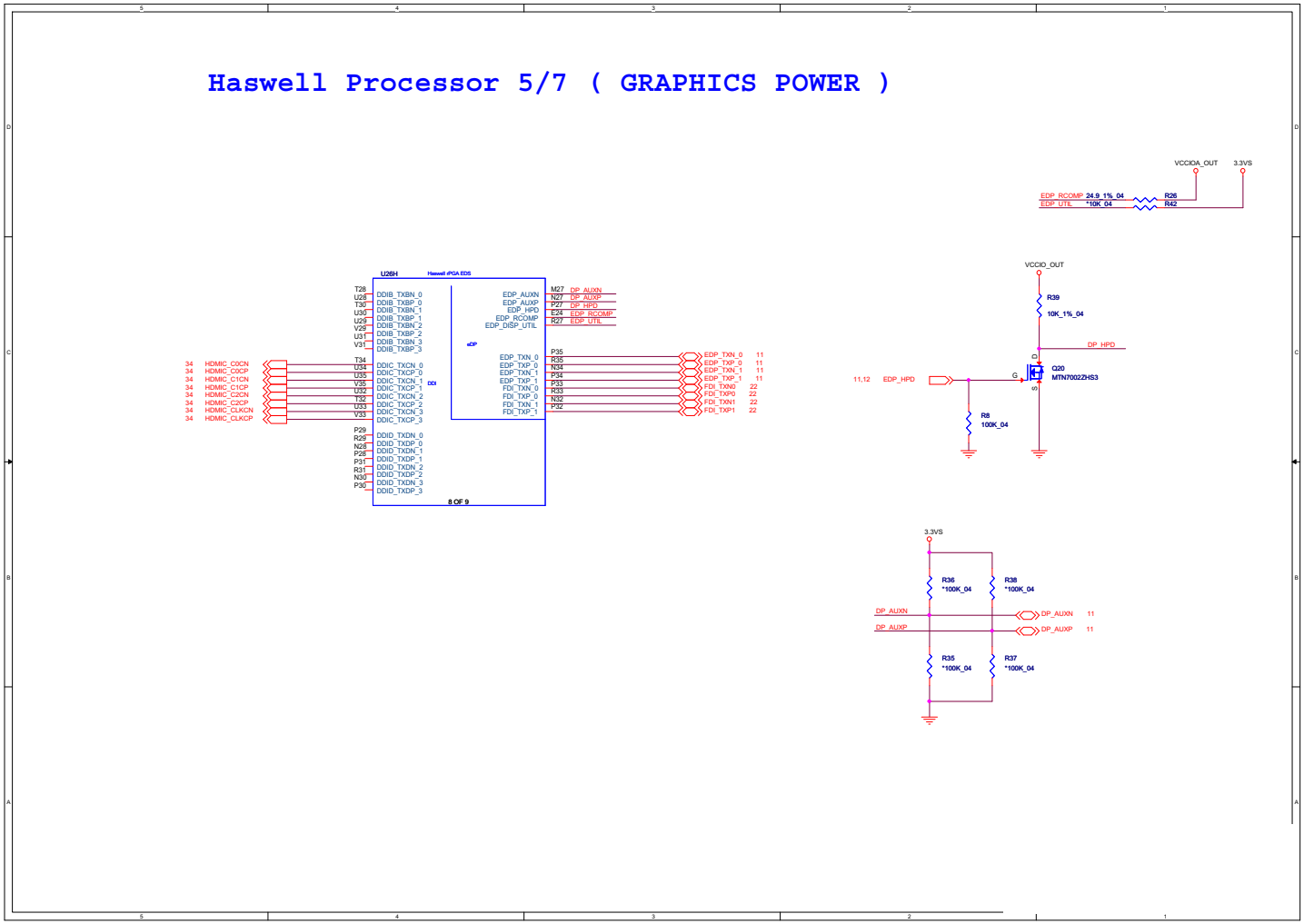

Sheet 6 of 46
Processor 5/7- GFX PWR

Processor 6/7- GND

Sheet 7 of 46
Processor 6/7- GND

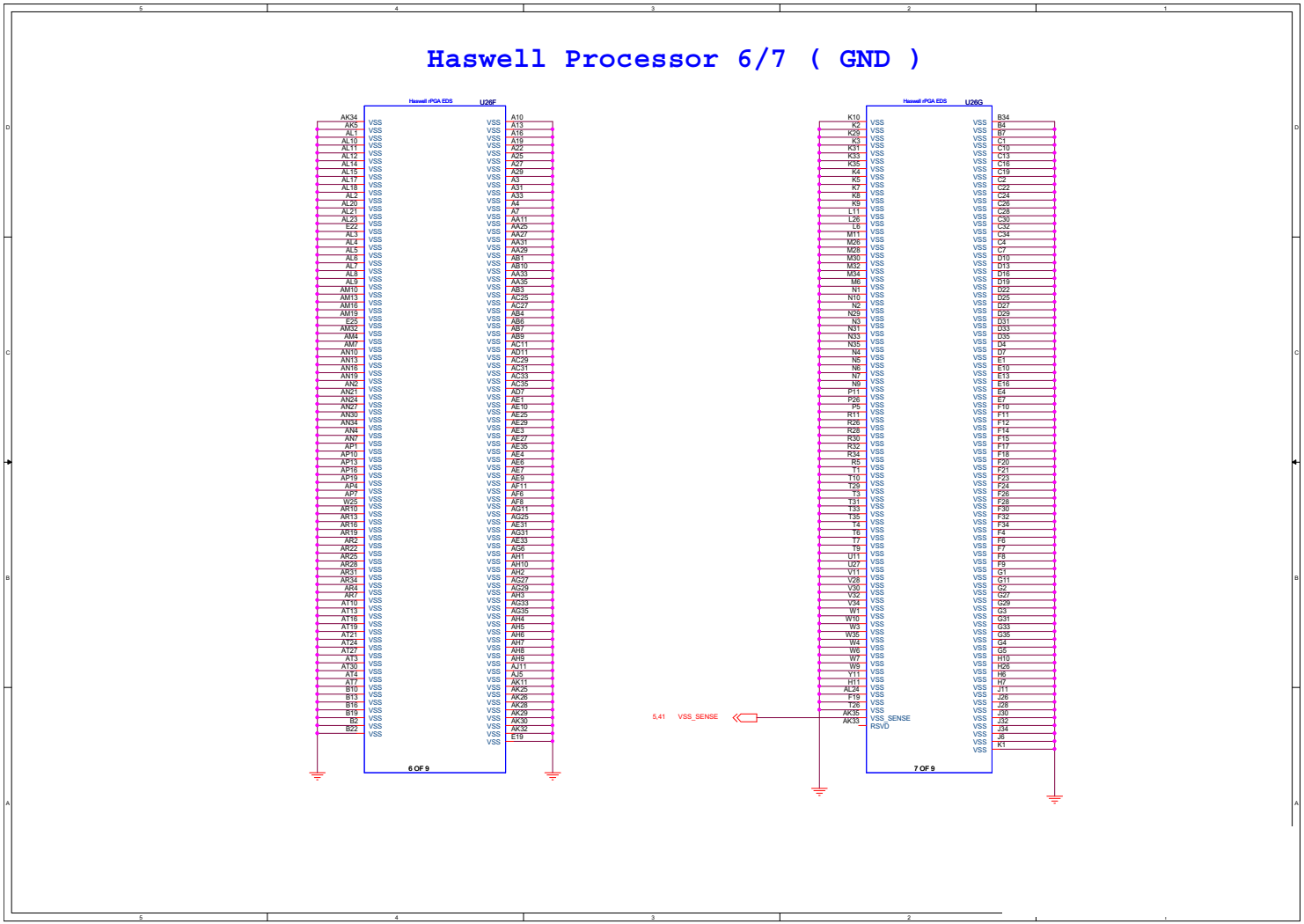

Processor 7/7- RSVD

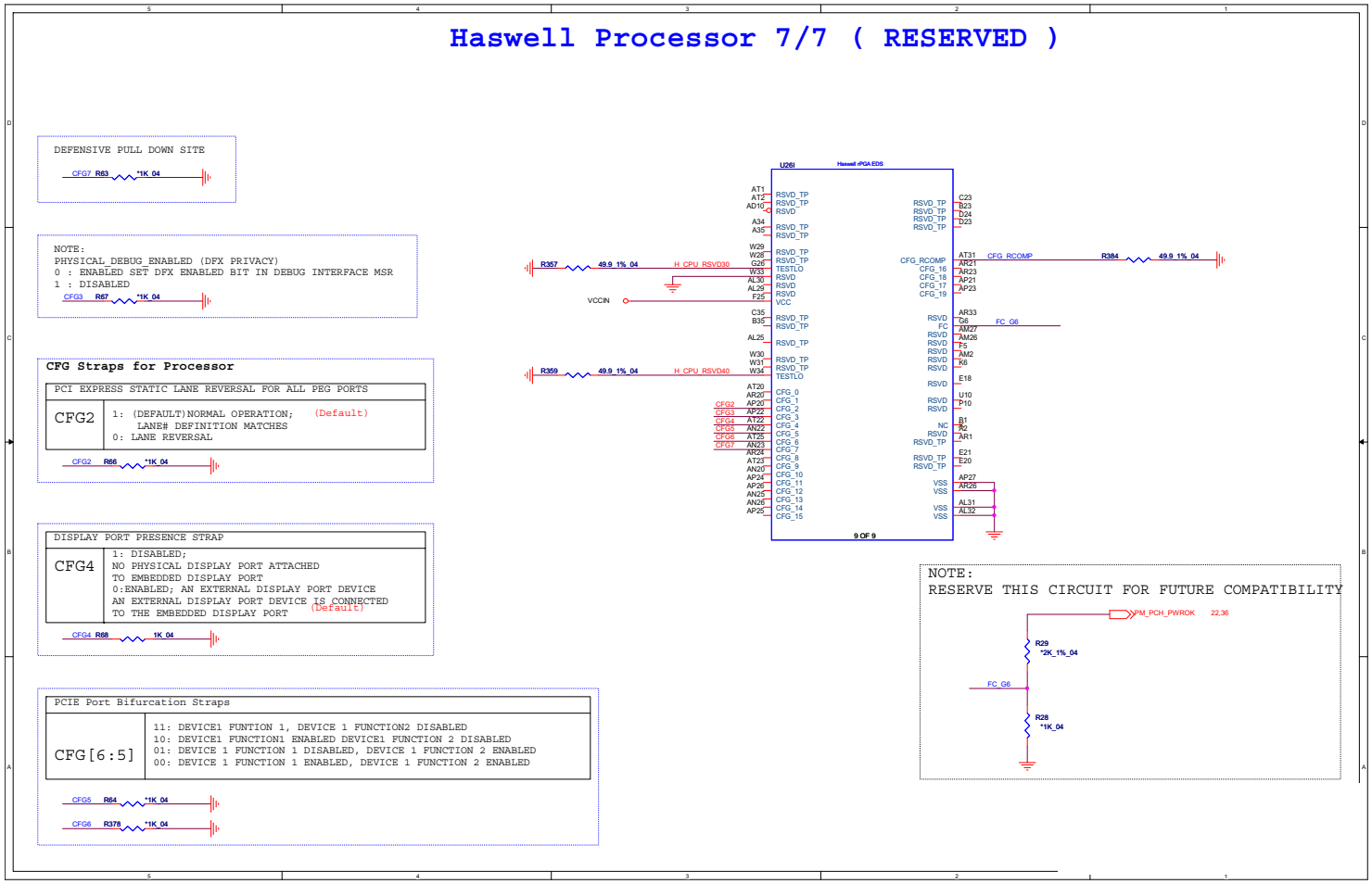

Sheet 8 of 46
Processor 7/7- RSVD

DDR3 SO-DIMM_1

Sheet 9 of 46
DDR3 SO-DIMM_0

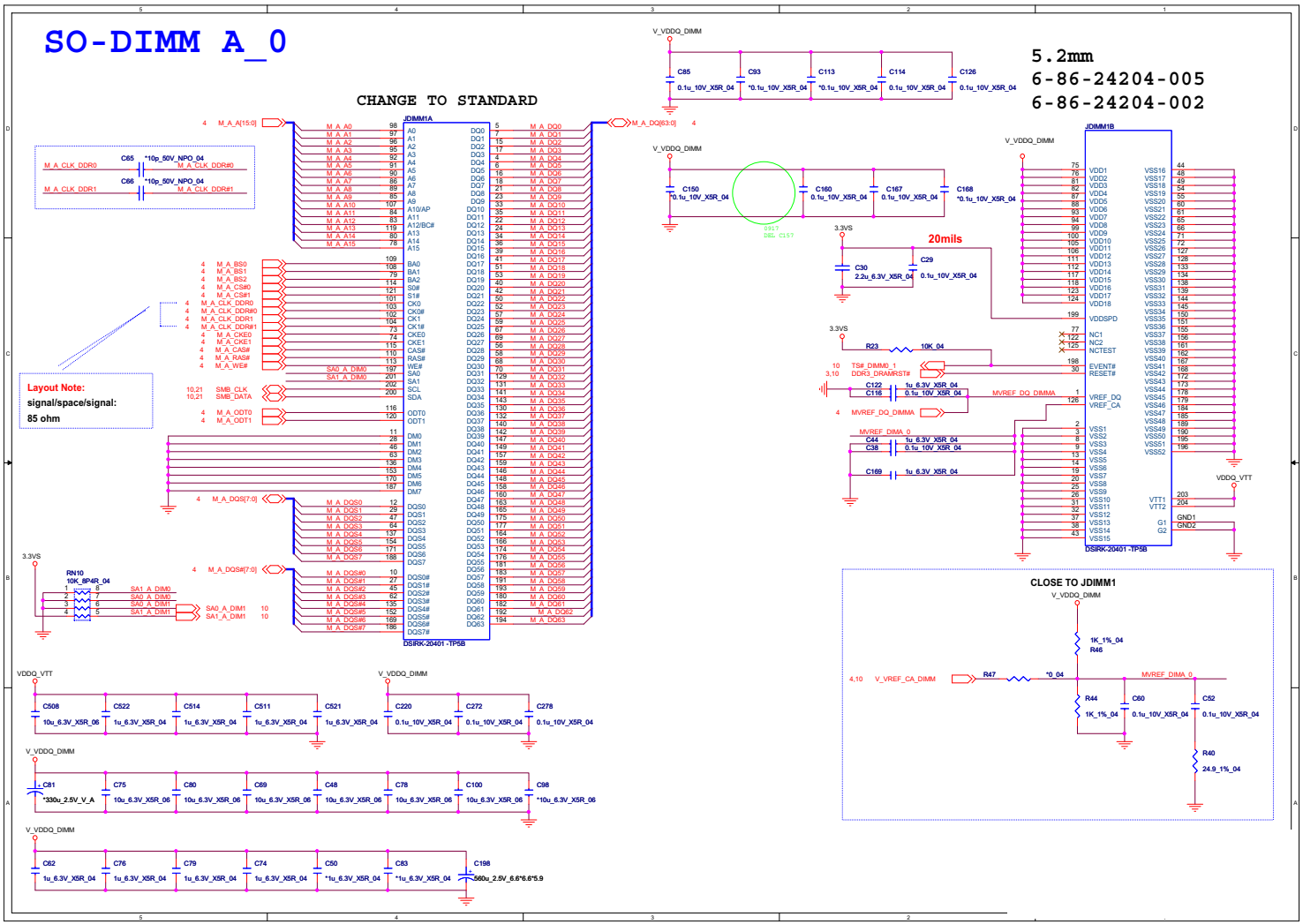

DDR3 SO-DIMM_2

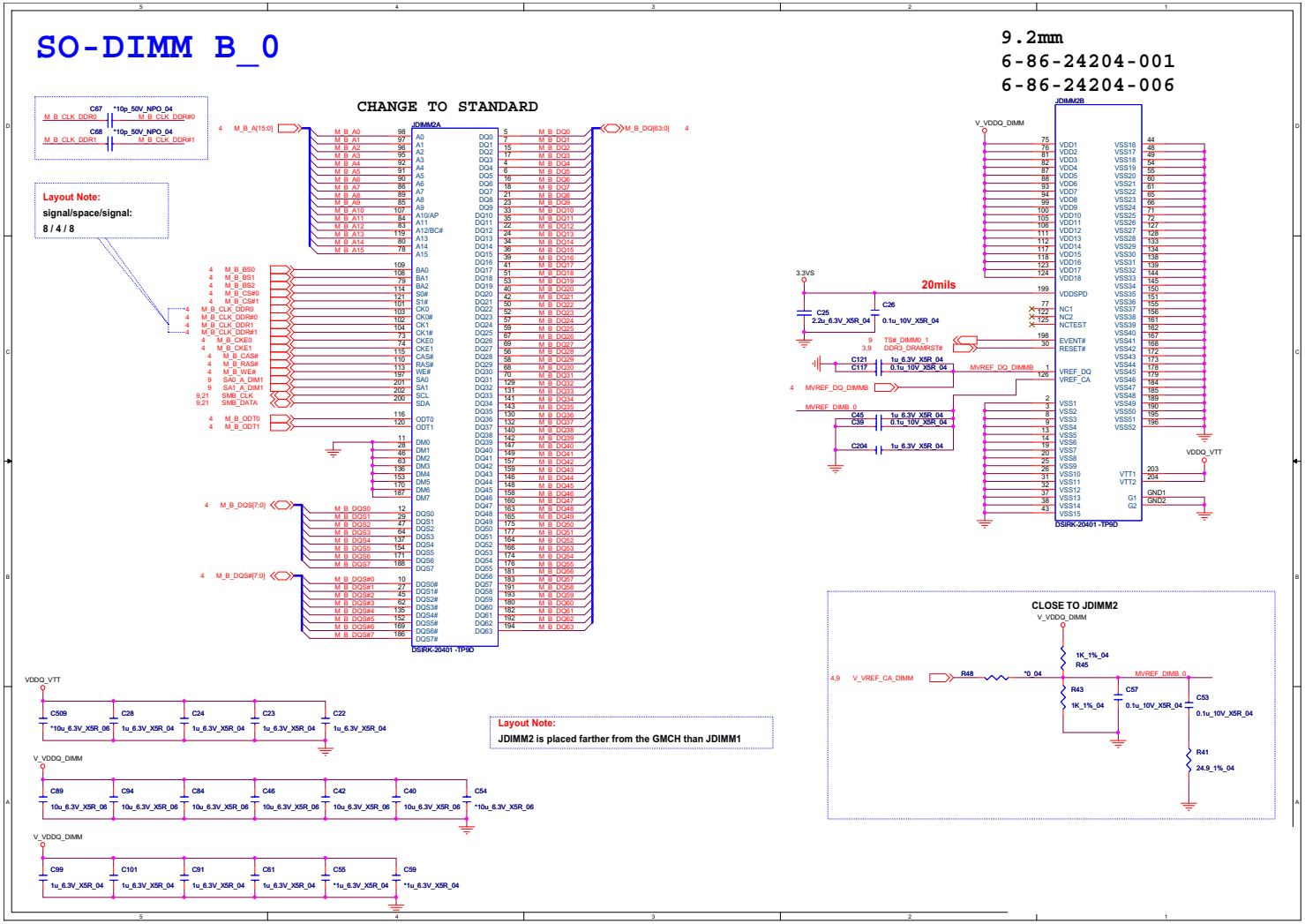

Sheet 10 of 46
DDR3 SO-DIMM_1

PS8625

Sheet 11 of 46
PS8625

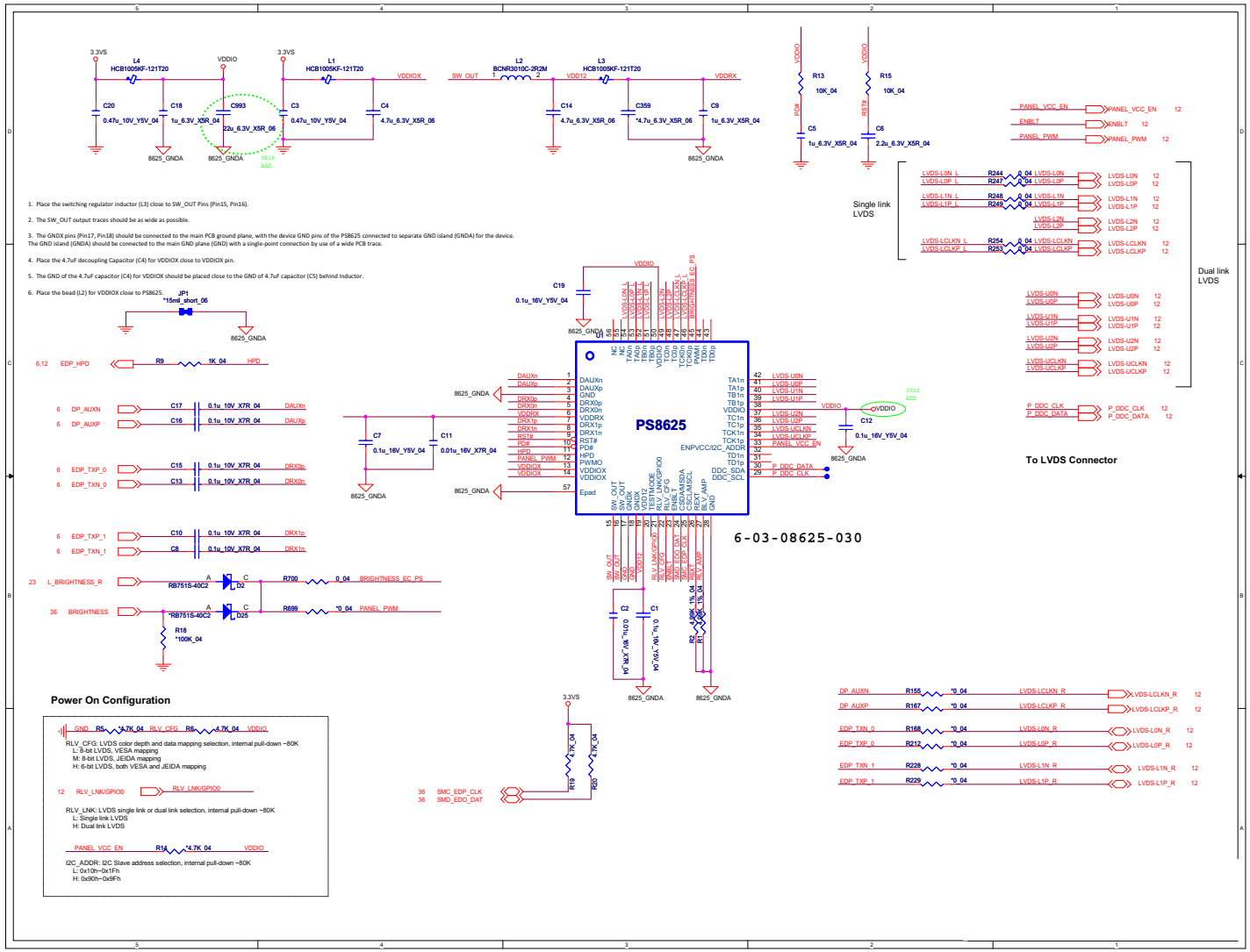

PANEL, INVERTER

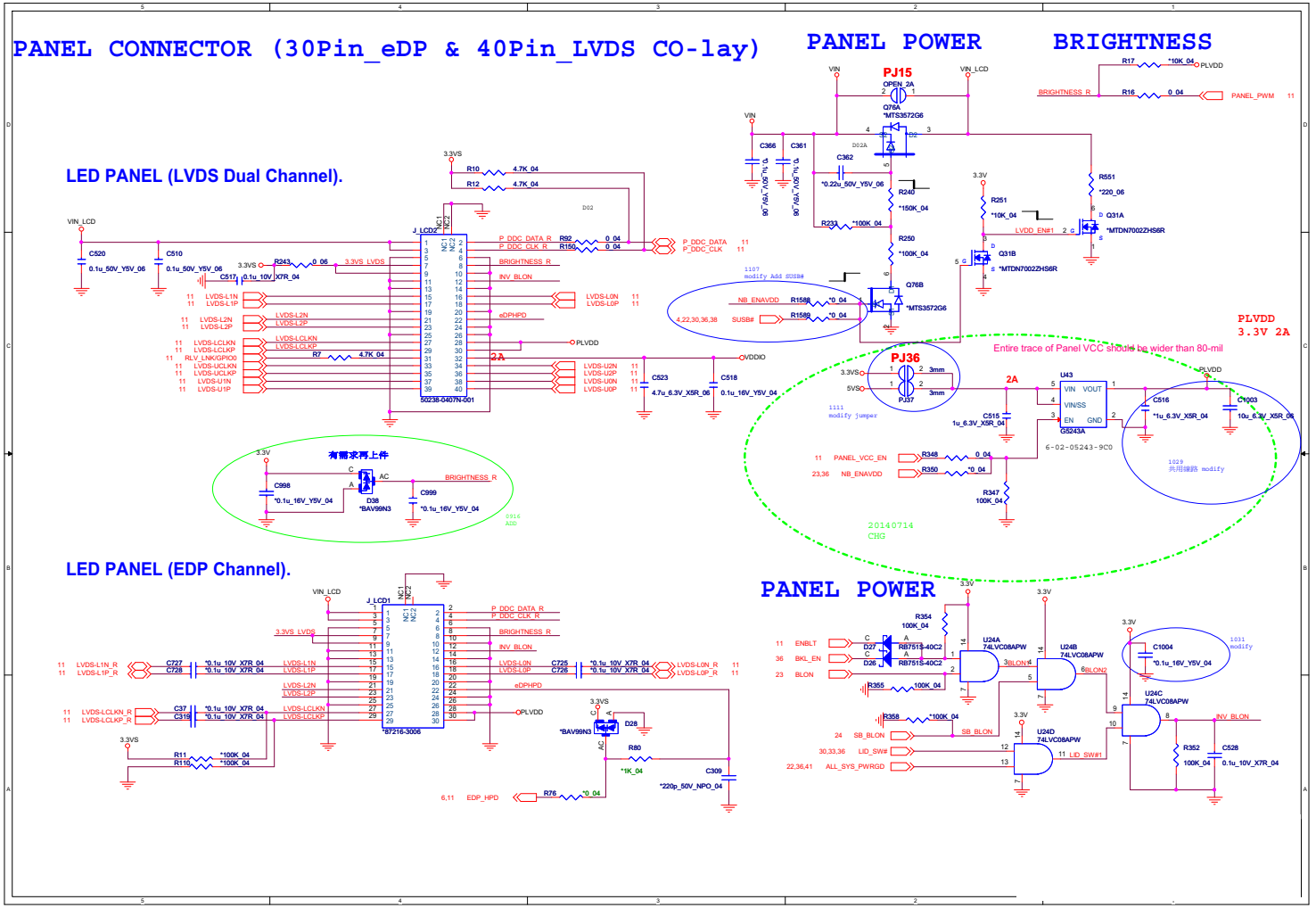

Sheet 12 of 46
PANEL, INVERTER

VGA PCI-E Interface

Sheet 13 of 46
VGA PCI-E
Interface

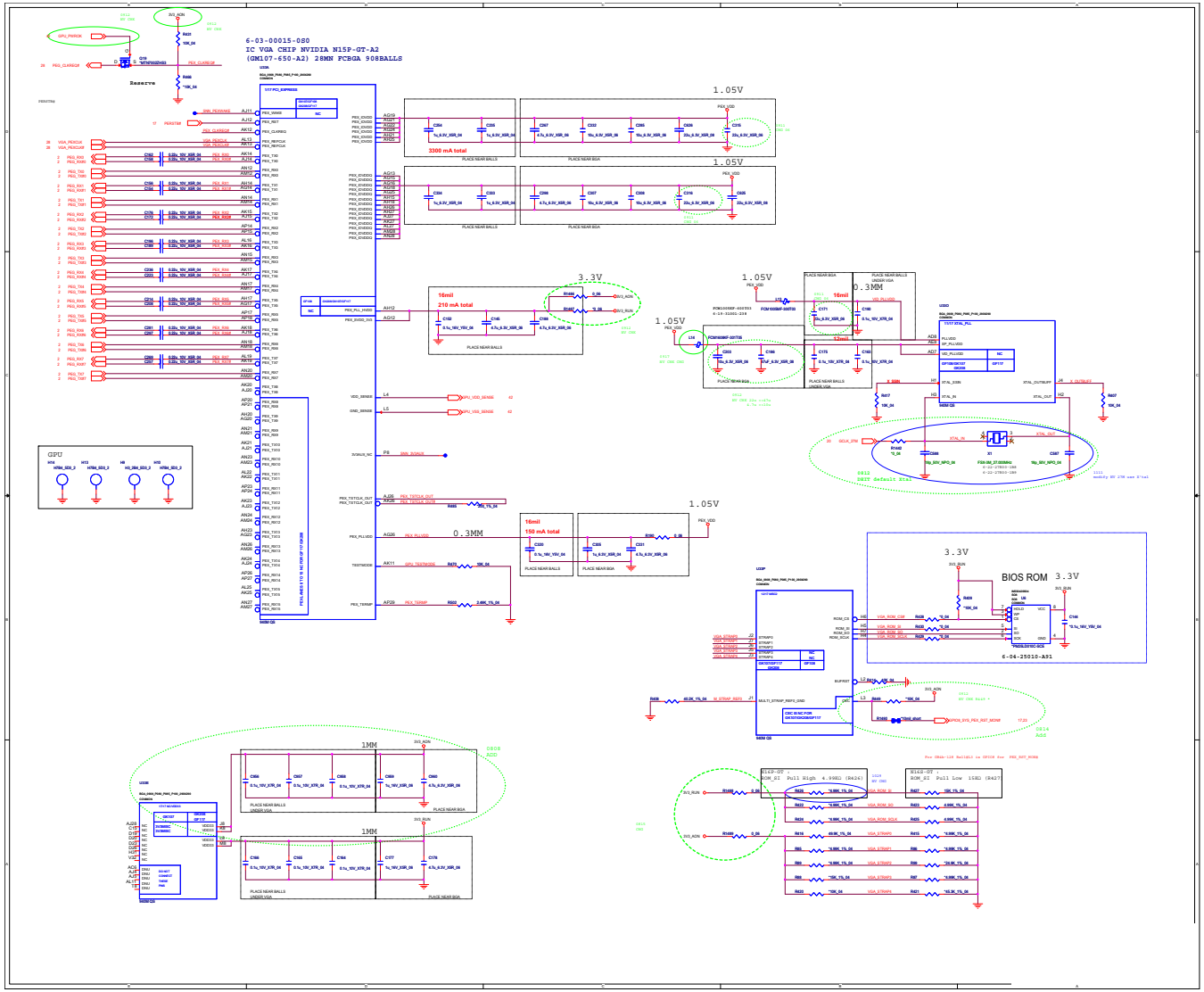

VGA Frame Buffer Interface

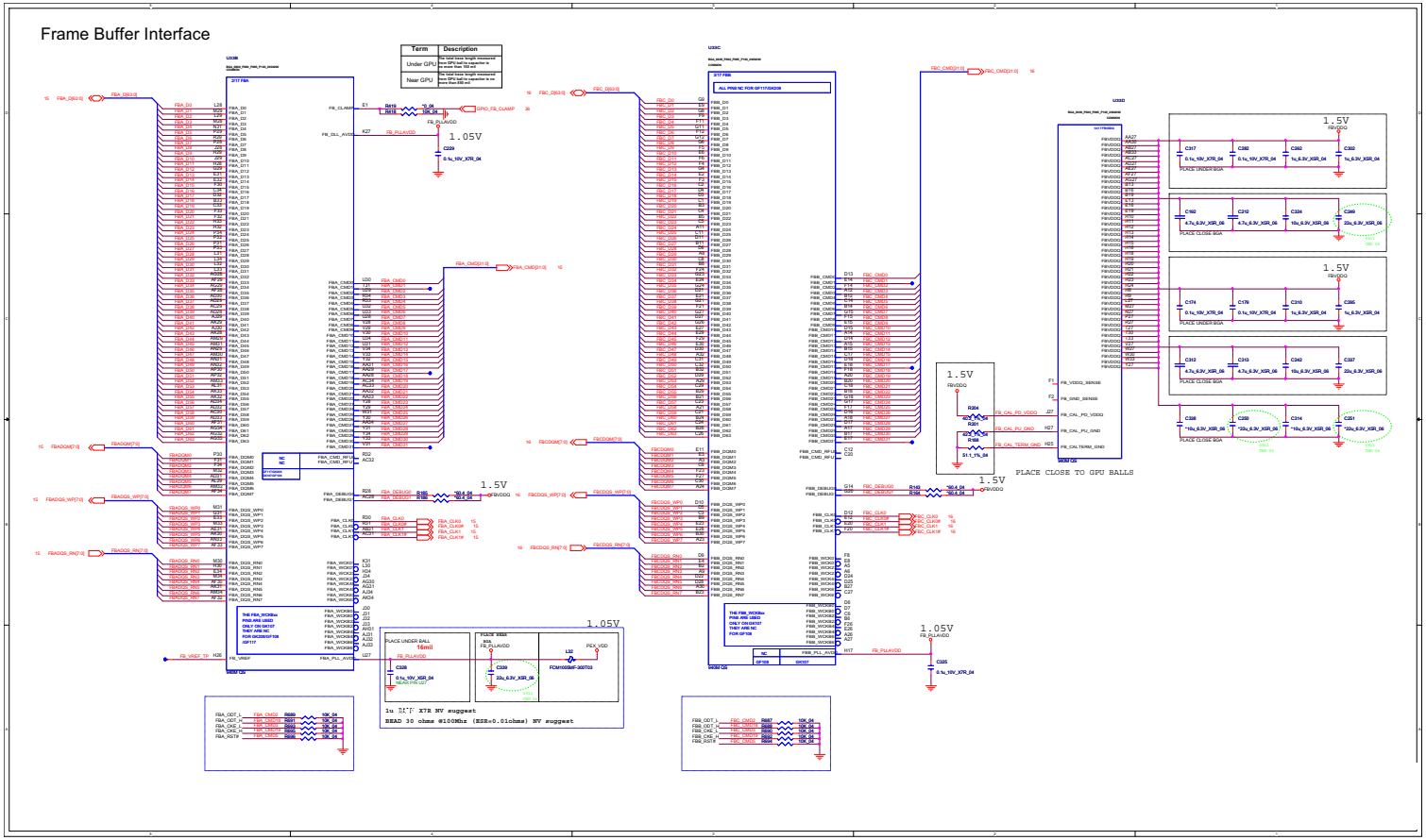

Sheet 14 of 46
VGA Frame Buffer Interface

VGA Frame Buffer A

Sheet 15 of 46
VGA Frame Buffer A

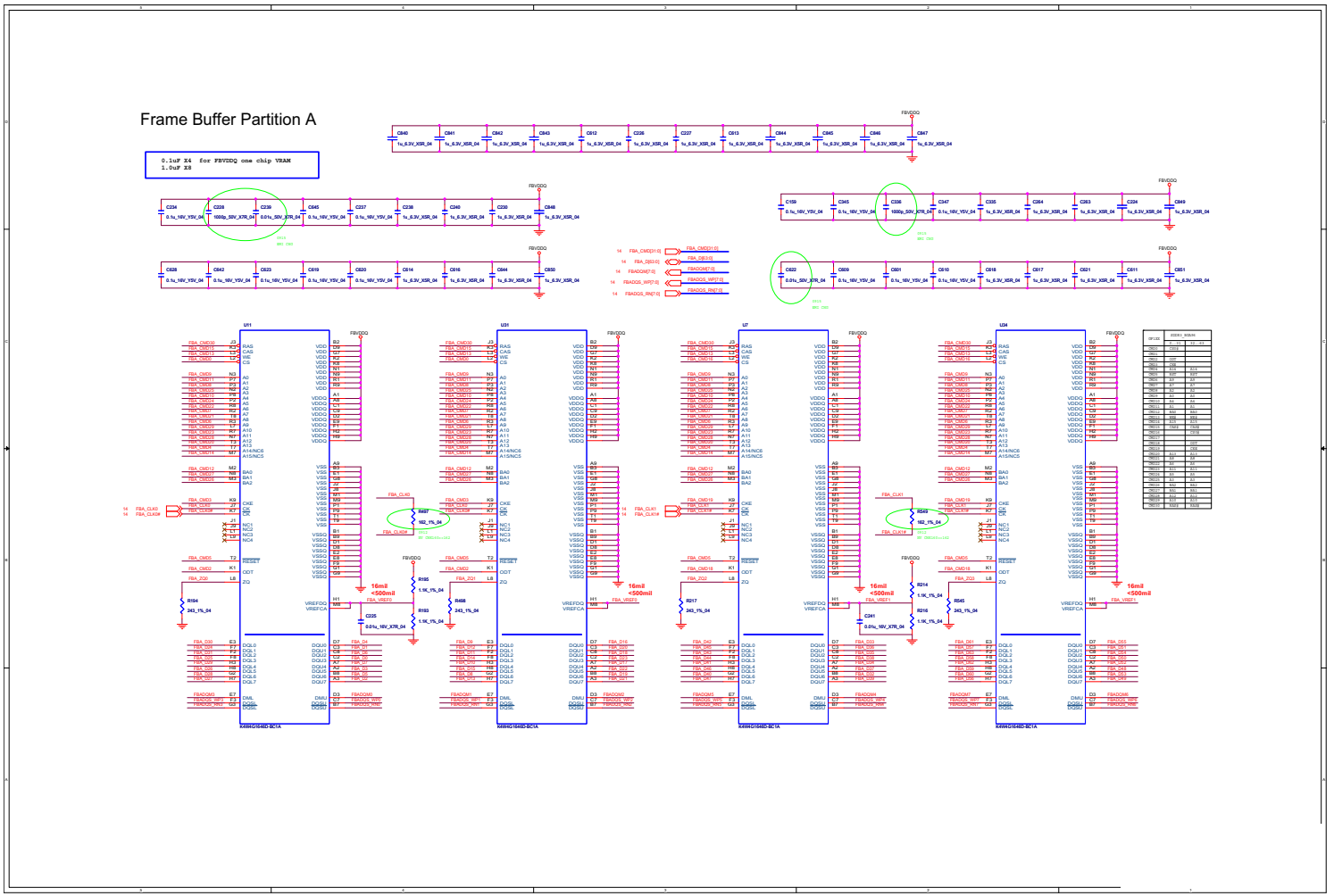

VGA Frame Buffer C

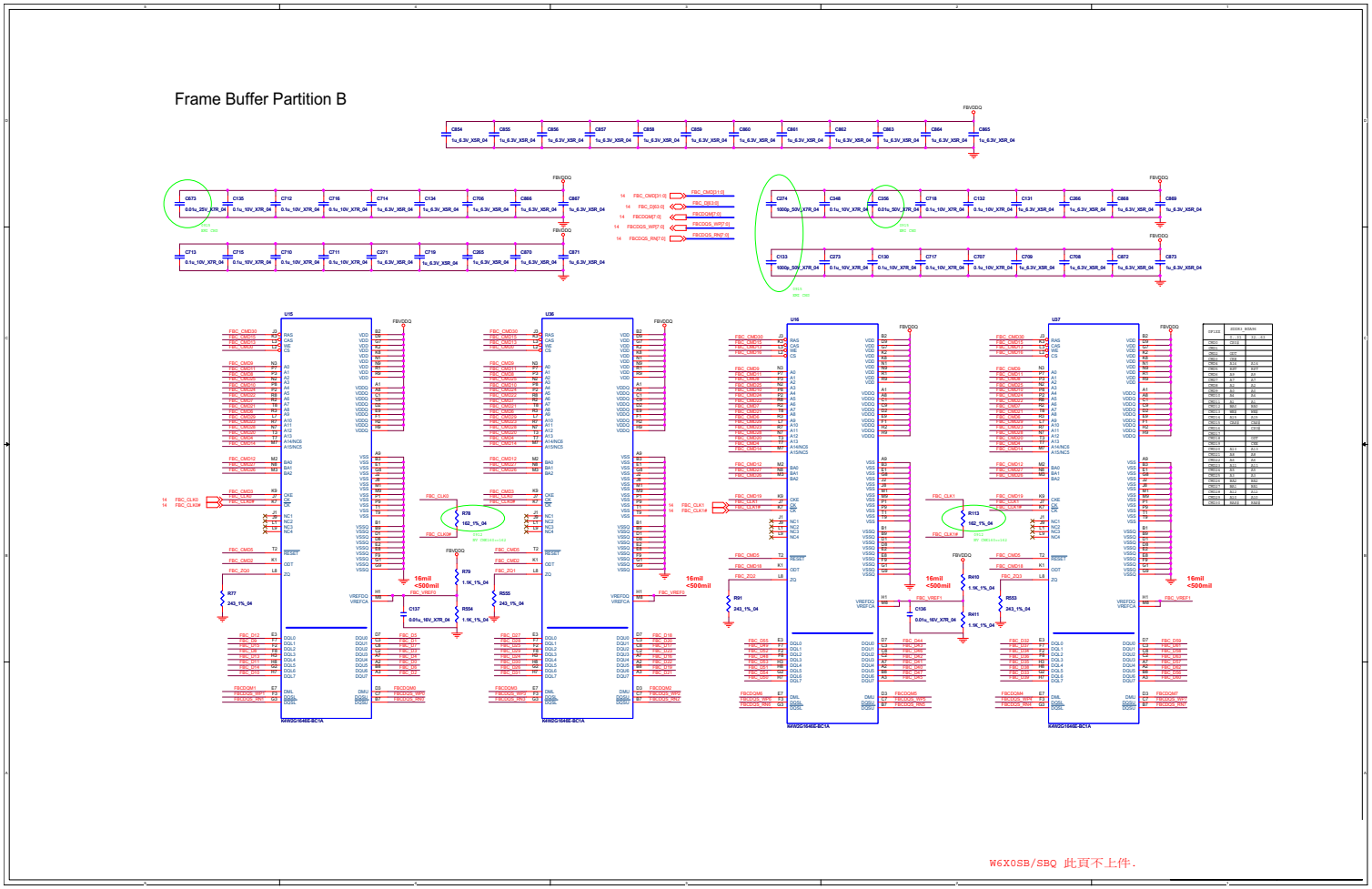

Sheet 16 of 46
VGA Frame Buffer
C

VGA I/O

Sheet 17 of 46
VGA I/O

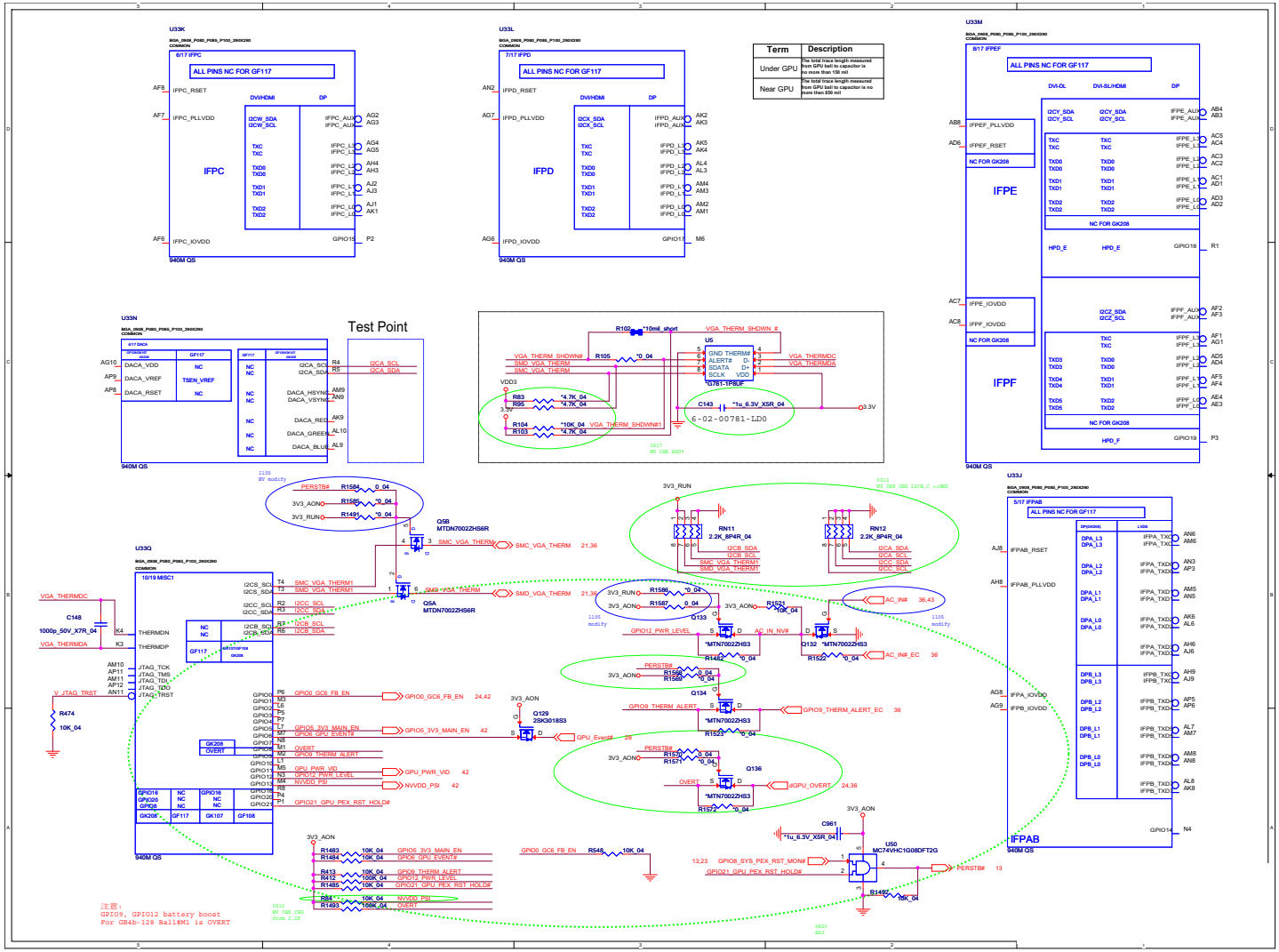

VGA NVVDD Decoupling

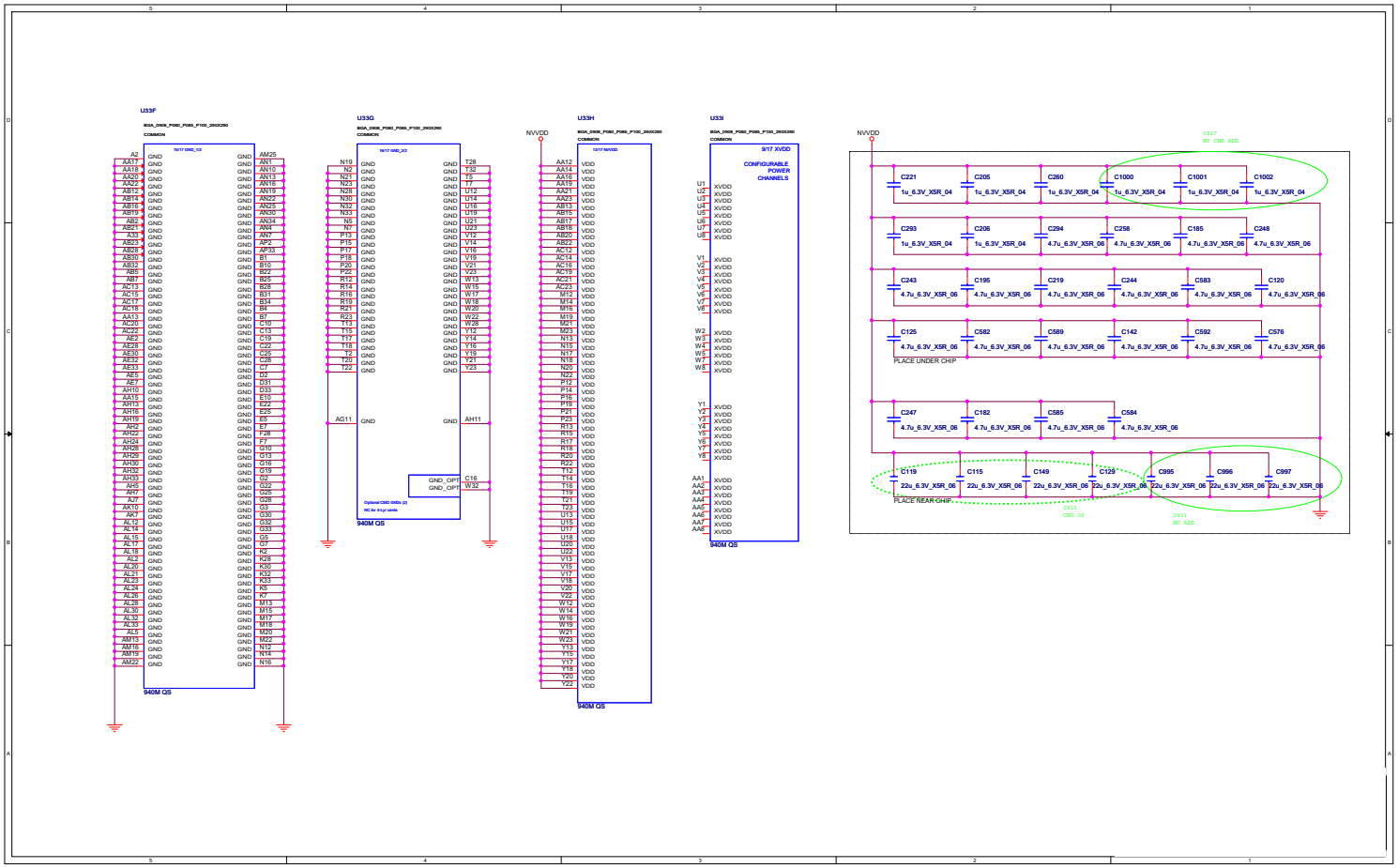

Sheet 18 of 46
VGA NVVDD Decoupling

CRT

Sheet 19 of 46
CRT

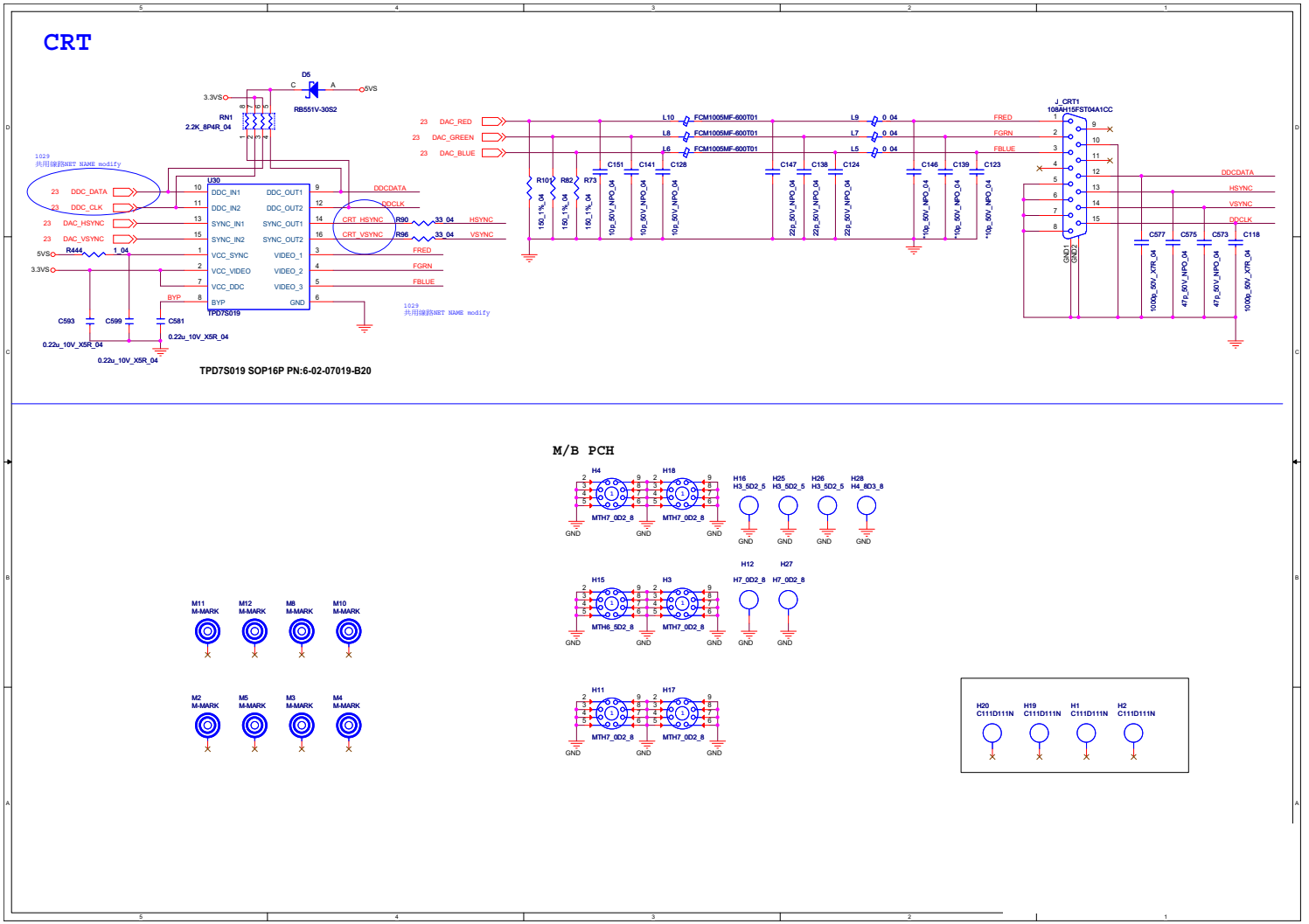

Lynx 1/9

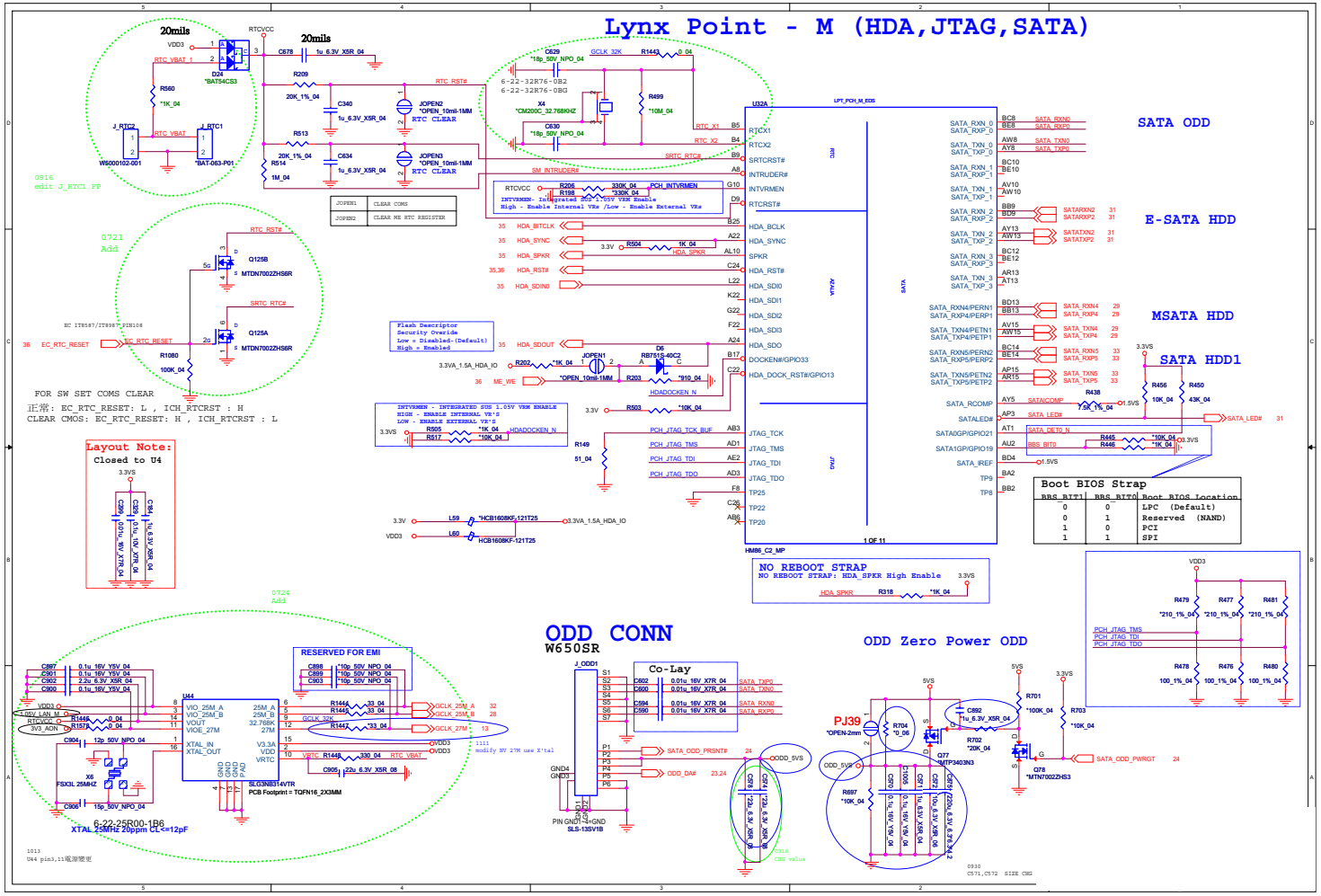

Sheet 20 of 46
Lynx 1/9

Lynx 2/9

Sheet 21 of 46
Lynx 2/9

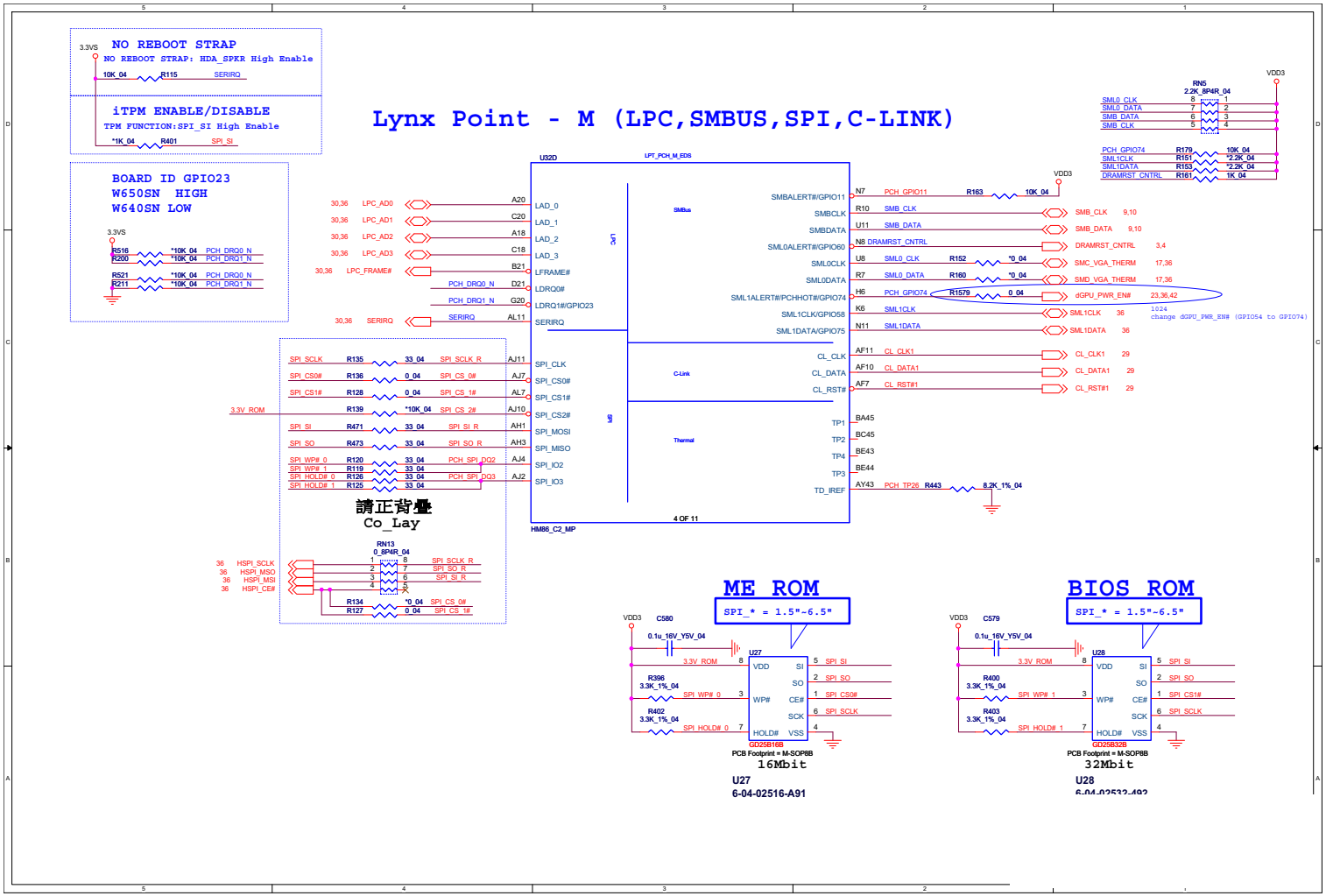

Lynx 3/9

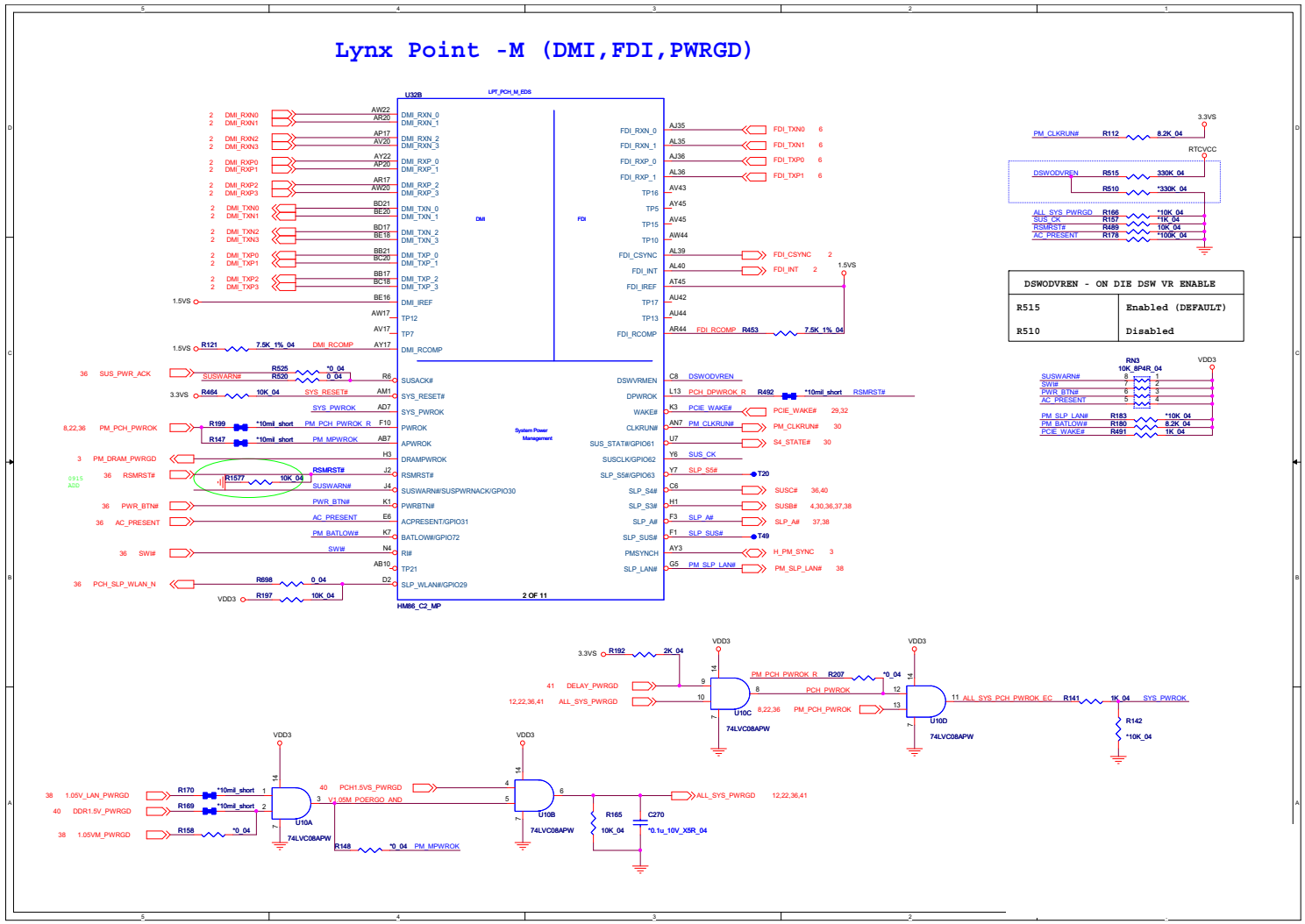

Sheet 22 of 46
Lynx 3/9

B.Schematic Diagrams

Lynx 4/9

Sheet 23 of 46
Lynx 4/9

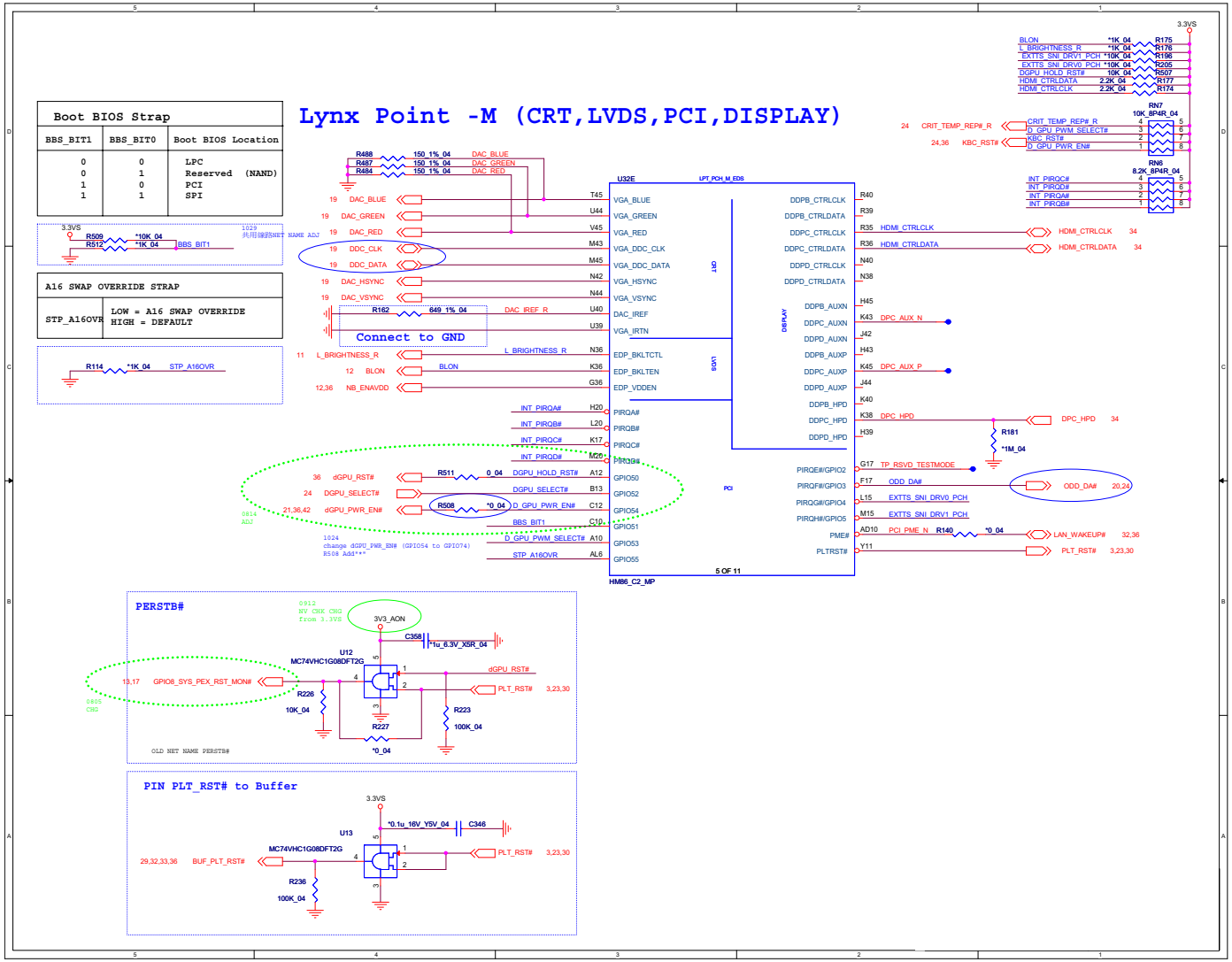

Lynx 5/9

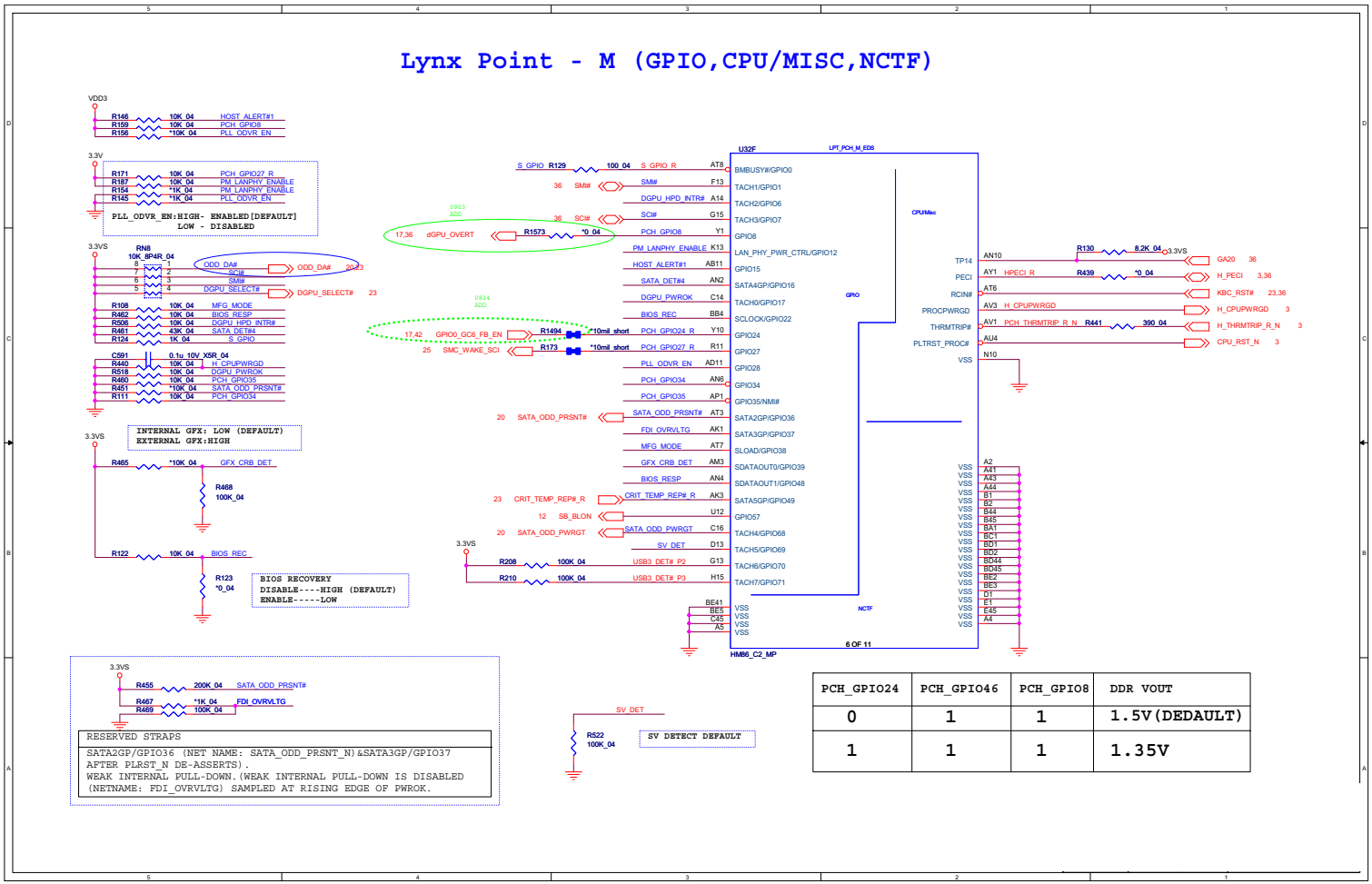

PCH_GPIO24	PCH_GPIO46	PCH_GPIO8	DDR VOUT
0	1	1	1.5V(DEDAULT)
1	1	1	1.35V

Sheet 24 of 46
Lynx 5/9

Lynx 6/9

Sheet 25 of 46
Lynx 6/9

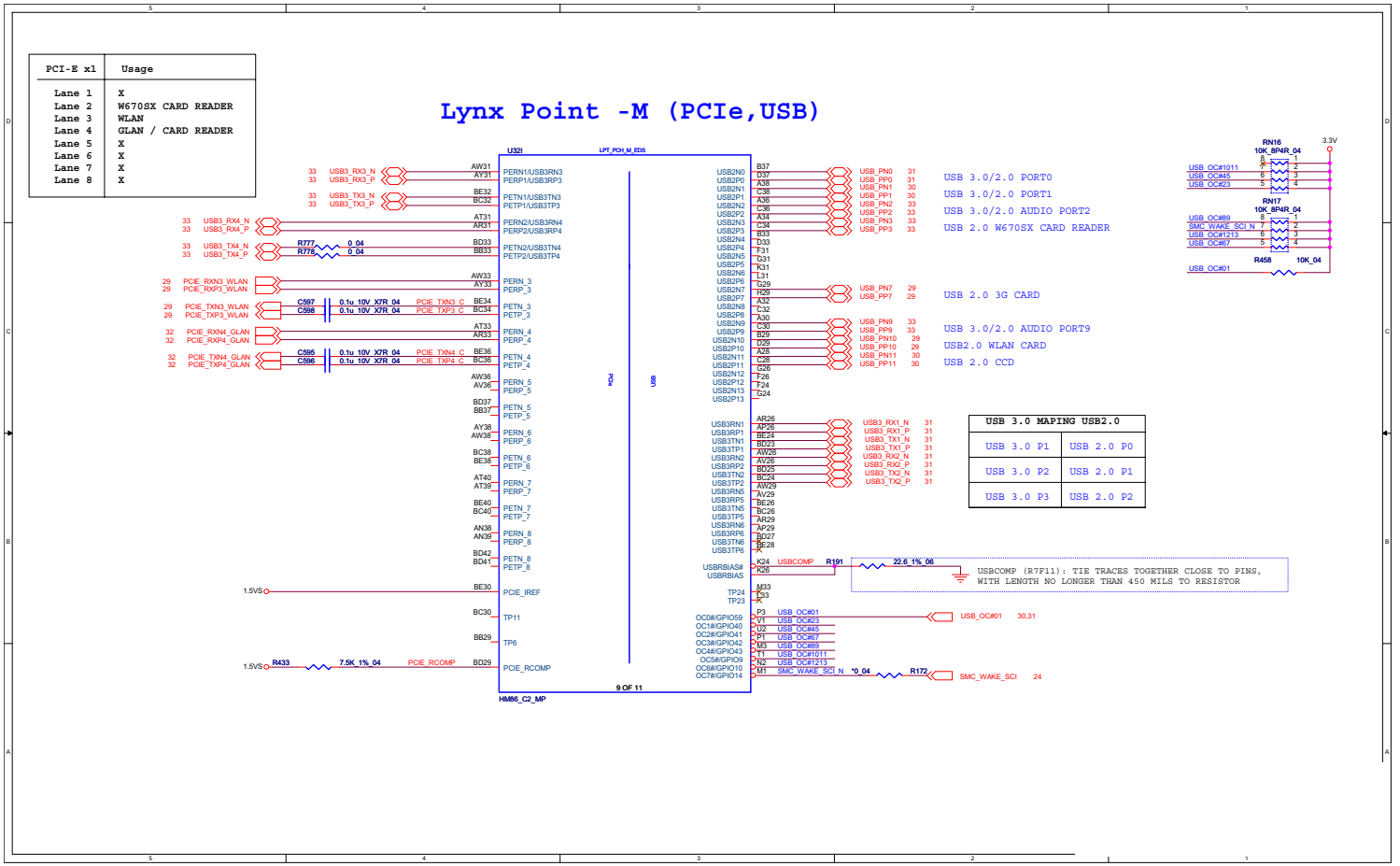

Lynx 7/9

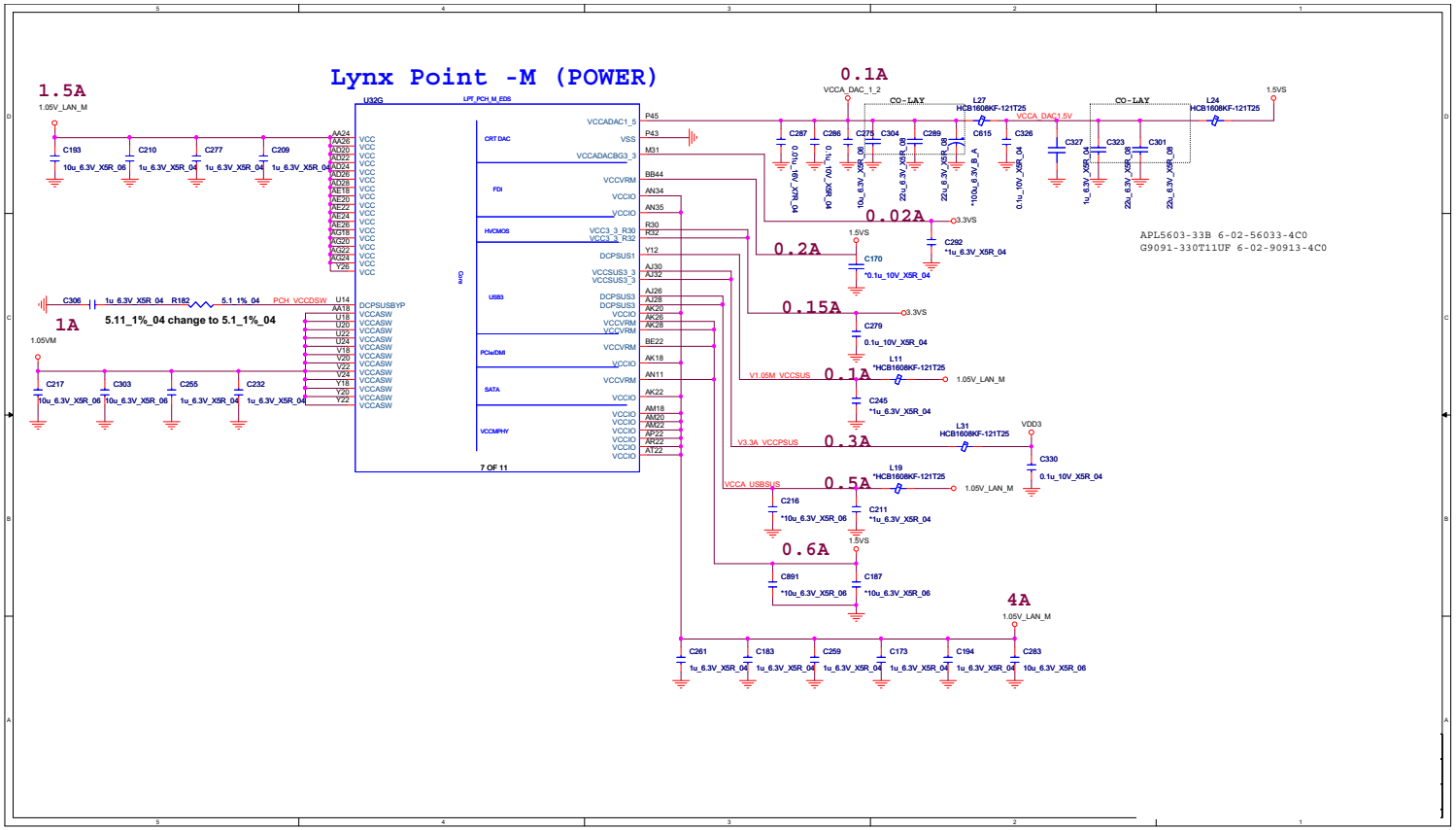

Sheet 26 of 46
Lynx 7/9

Lynx 8/9

Sheet 27 of 46
Lynx 8/9

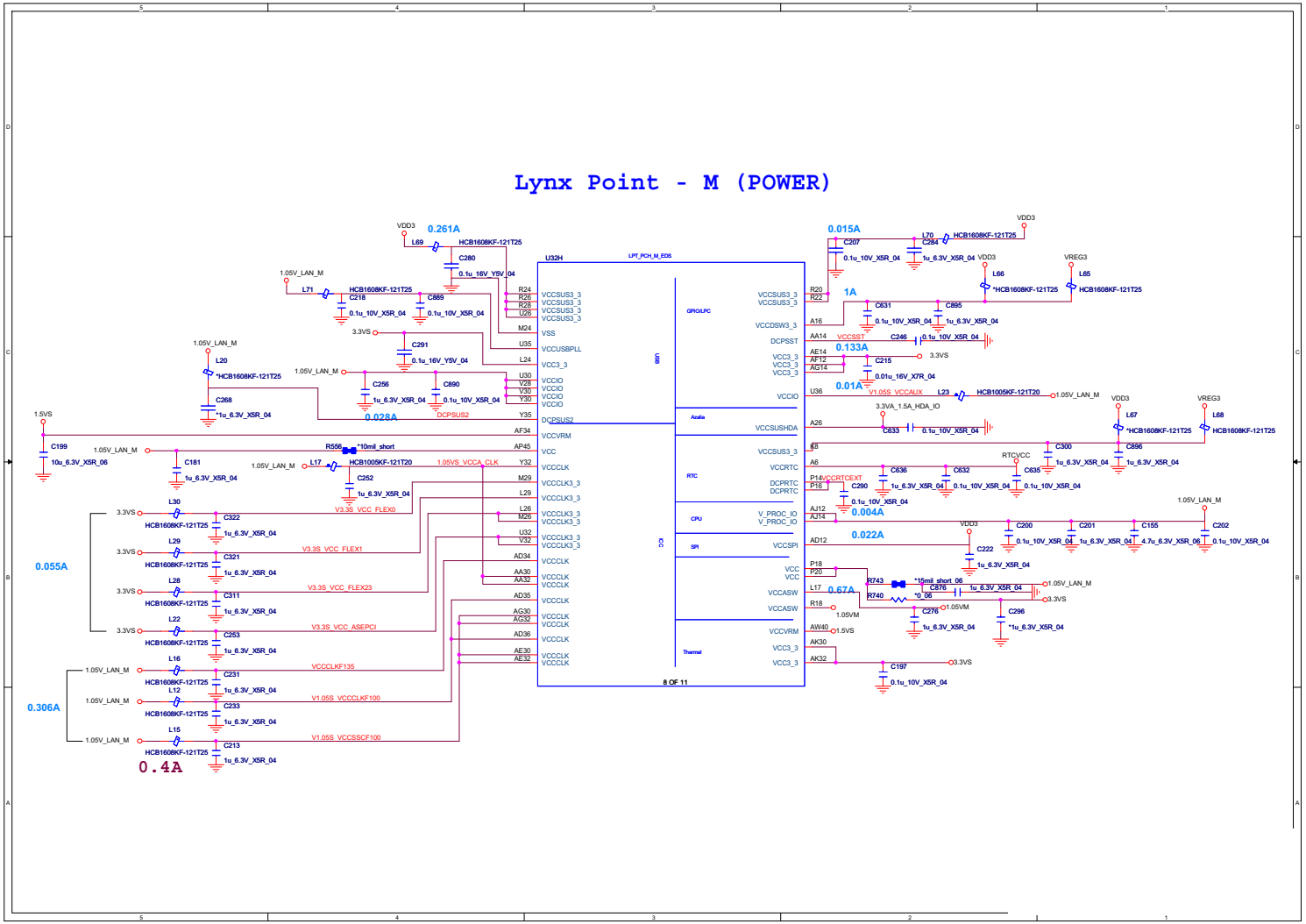

Lynx 9/9

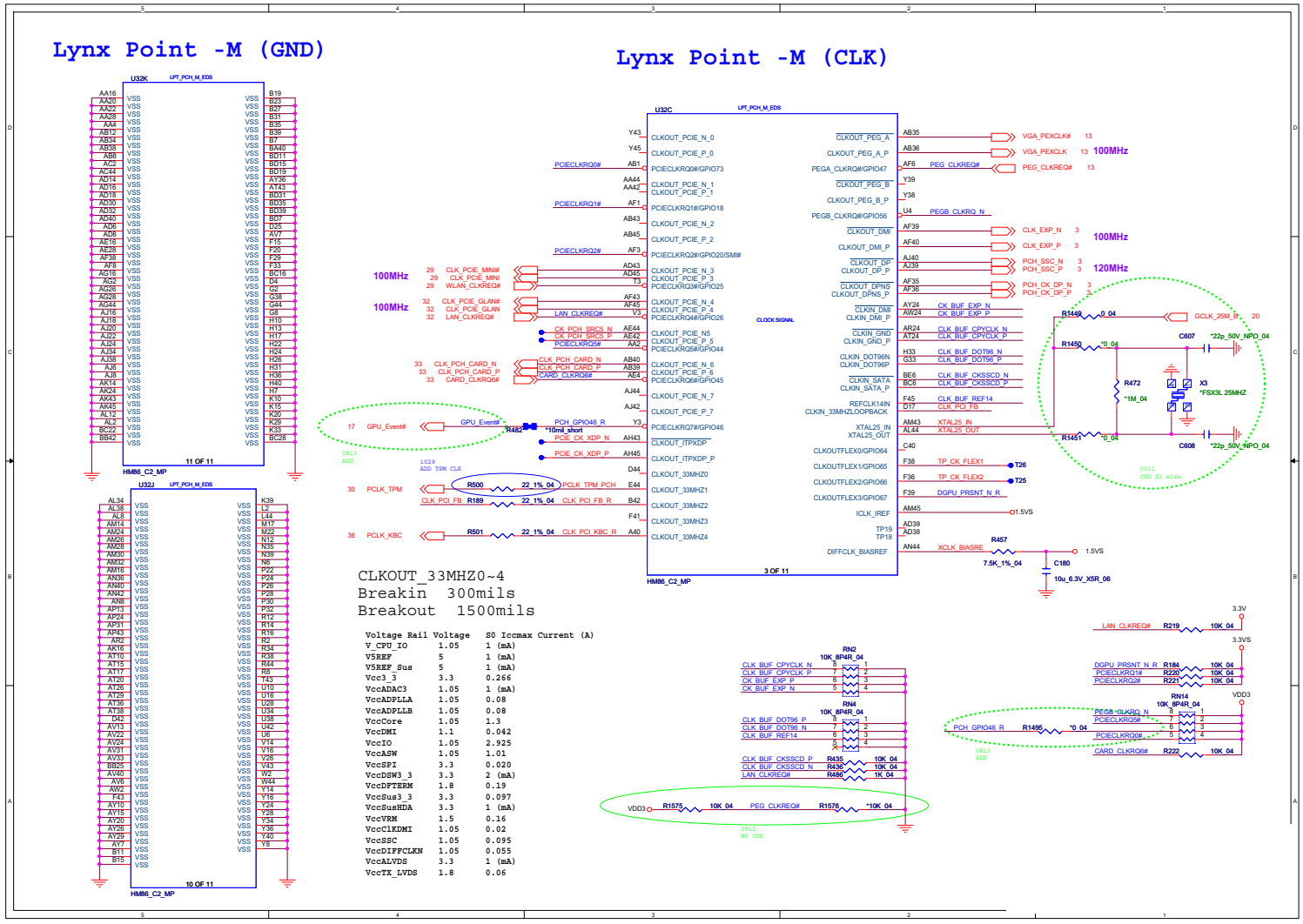

Sheet 28 of 46
Lynx 9/9

B.Schematic Diagrams

Mini PCIE, Fan Con

Sheet 29 of 46
Mini PCIE, Fan Con

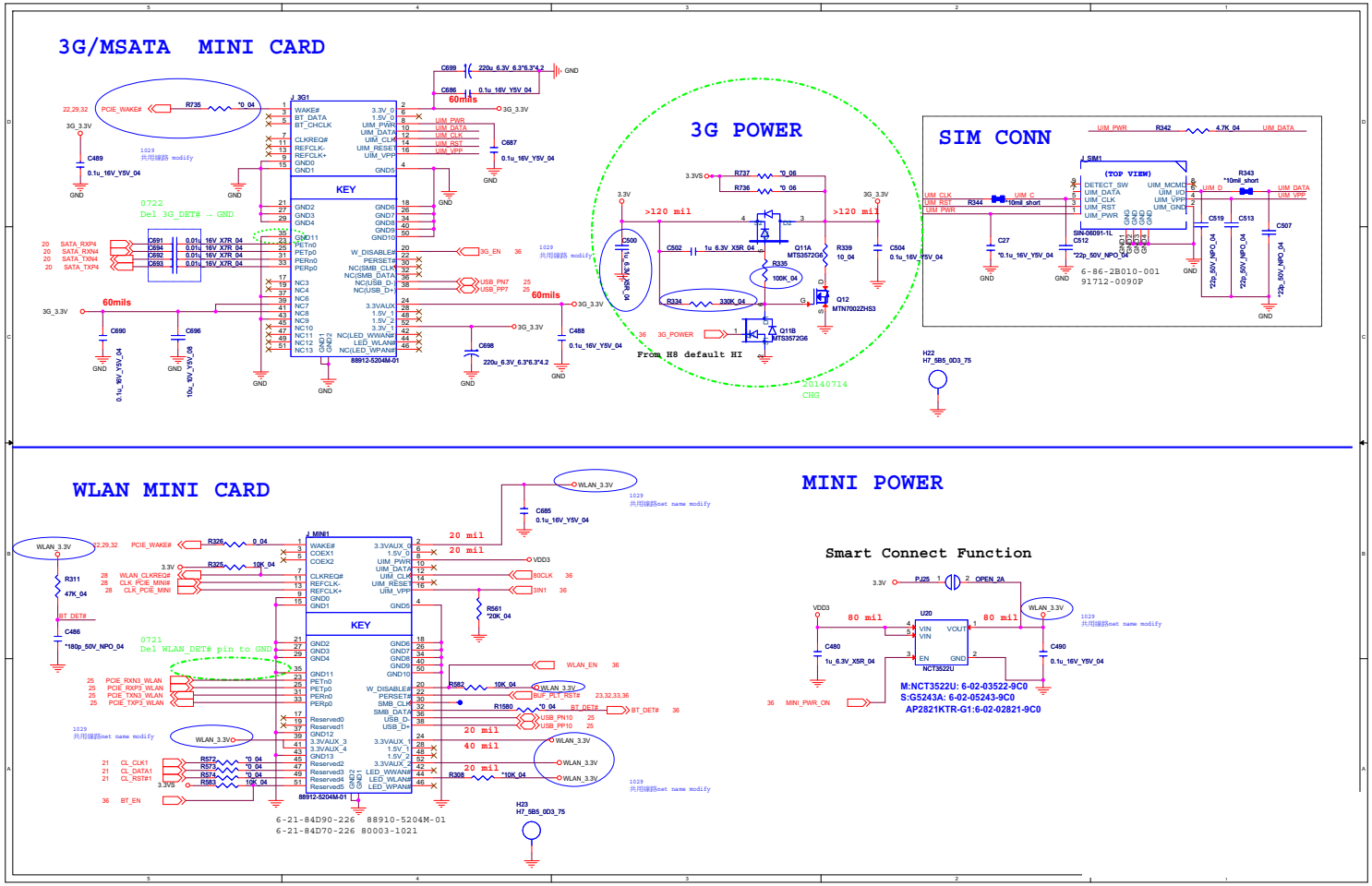

USB Charge, CCD, TPM, Power Con

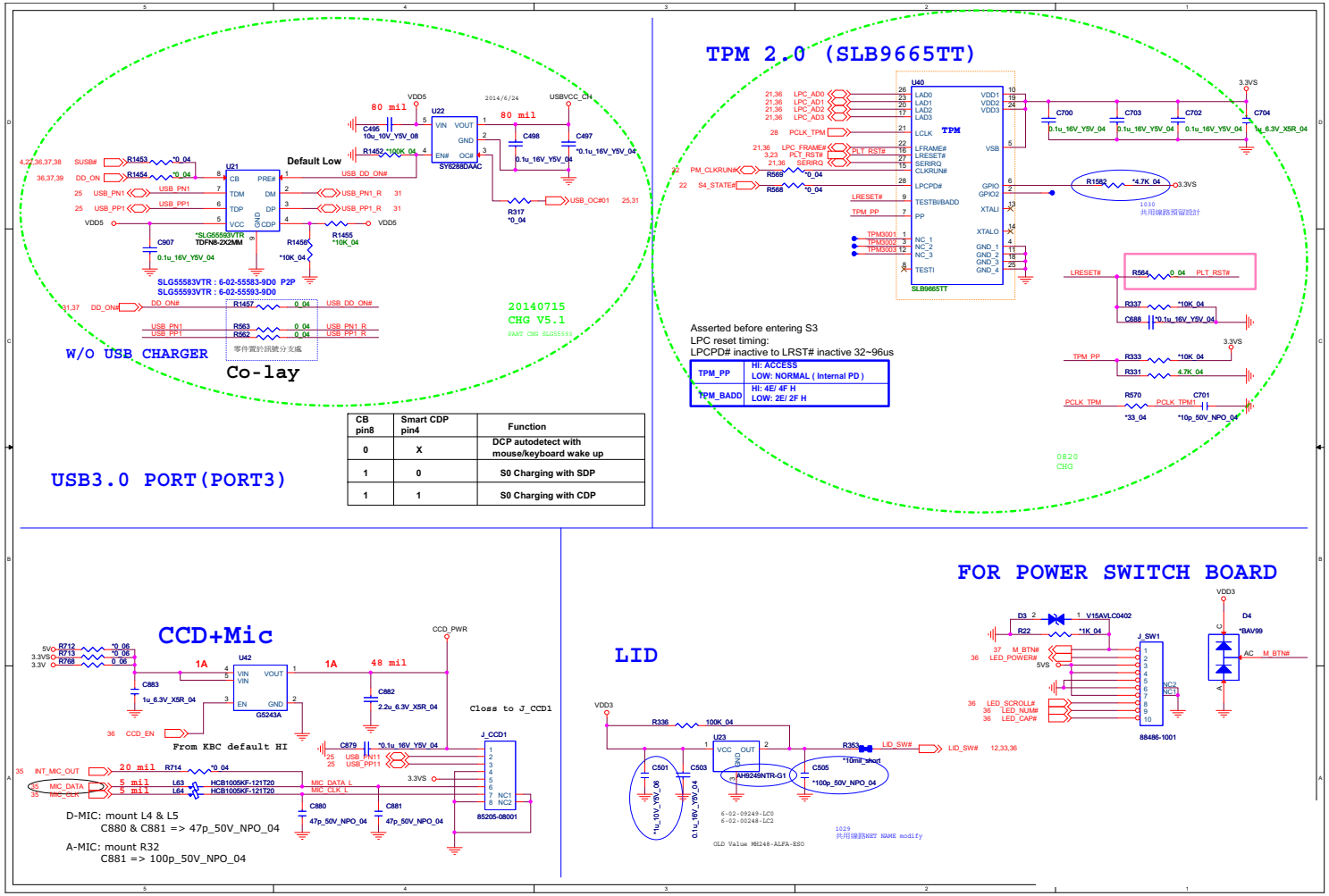

Sheet 30 of 46
USB Charge, CCD, TPM, Power Con

eSATA/USB3.0, LED

Sheet 31 of 46
eSATA/USB3.0, LED

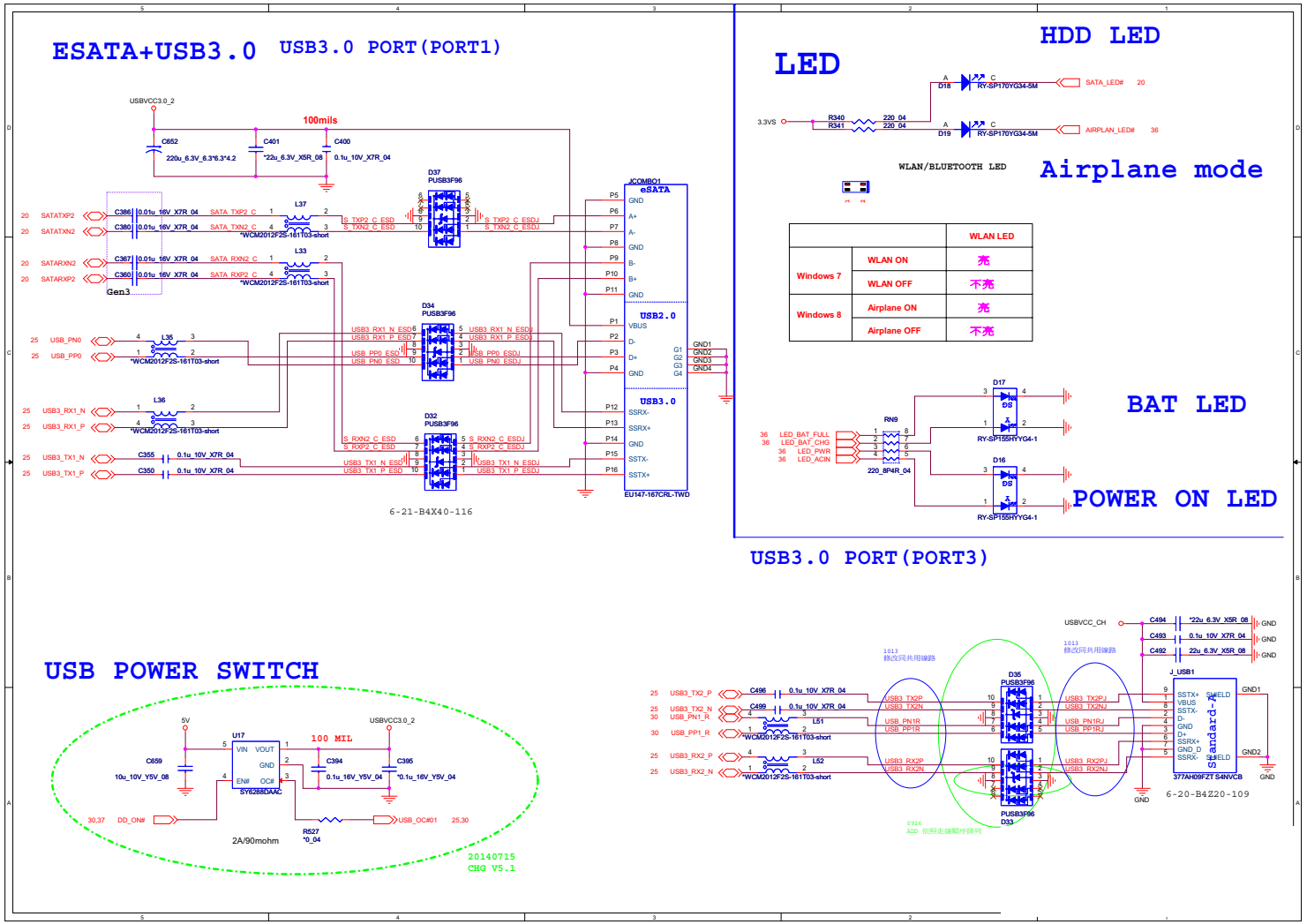

Card Reader (RTL8411B)

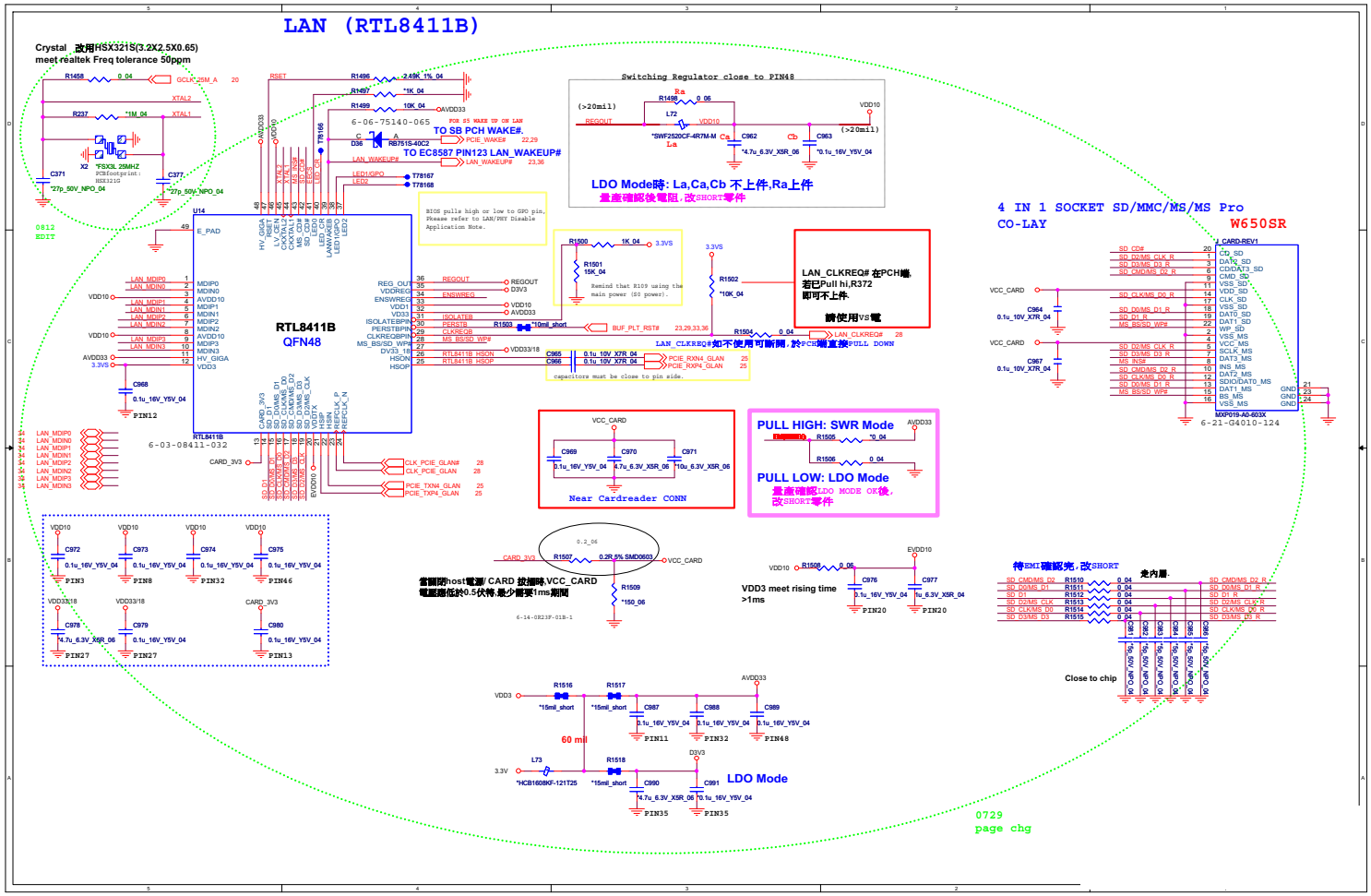

Sheet 32 of 46
Card Reader
(RTL8411B)

HDD, TP, Audio, USB

Sheet 33 of 46
HDD, TP, Audio, USB

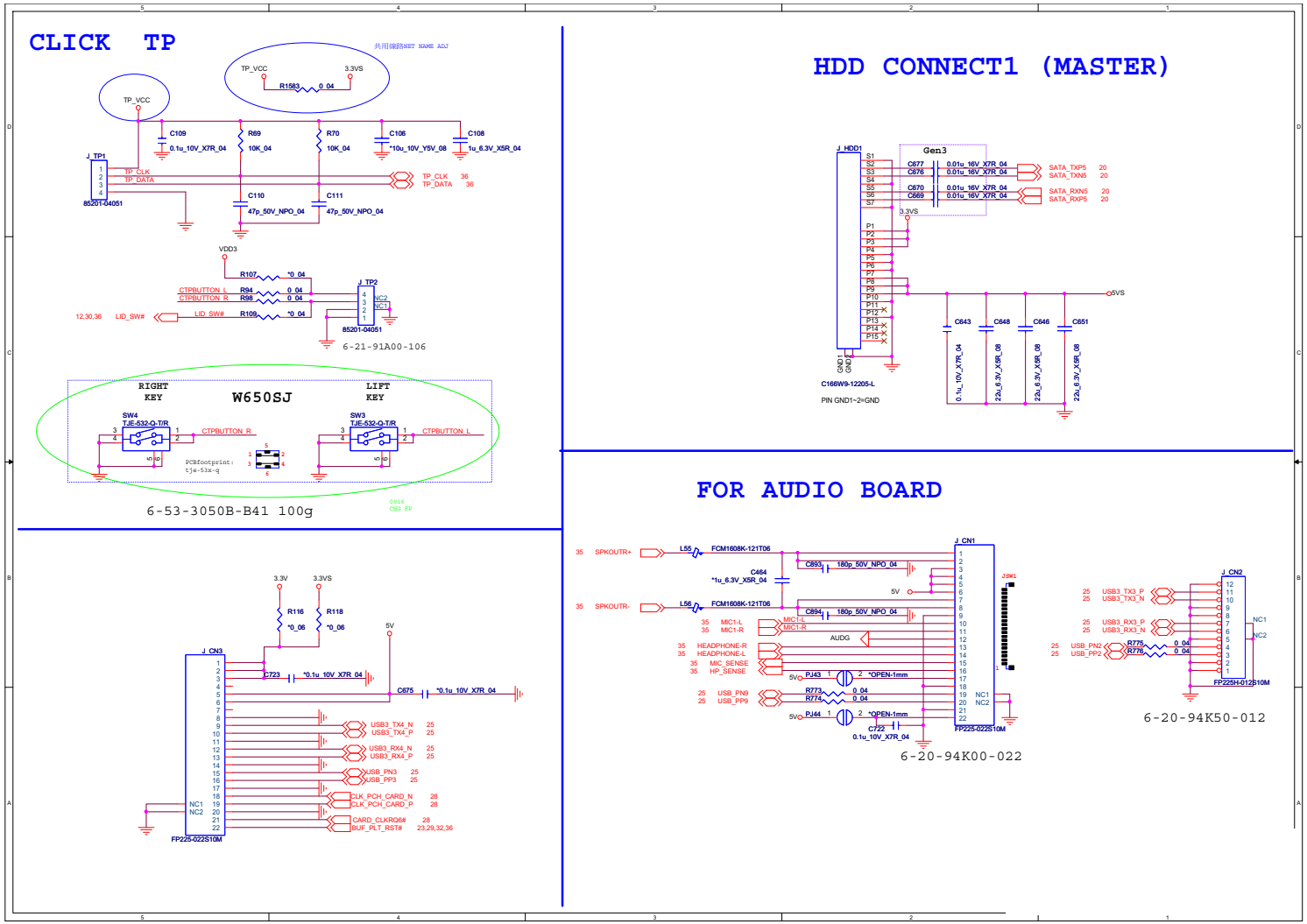

HDMI, RJ45, Fan, KBC, LED

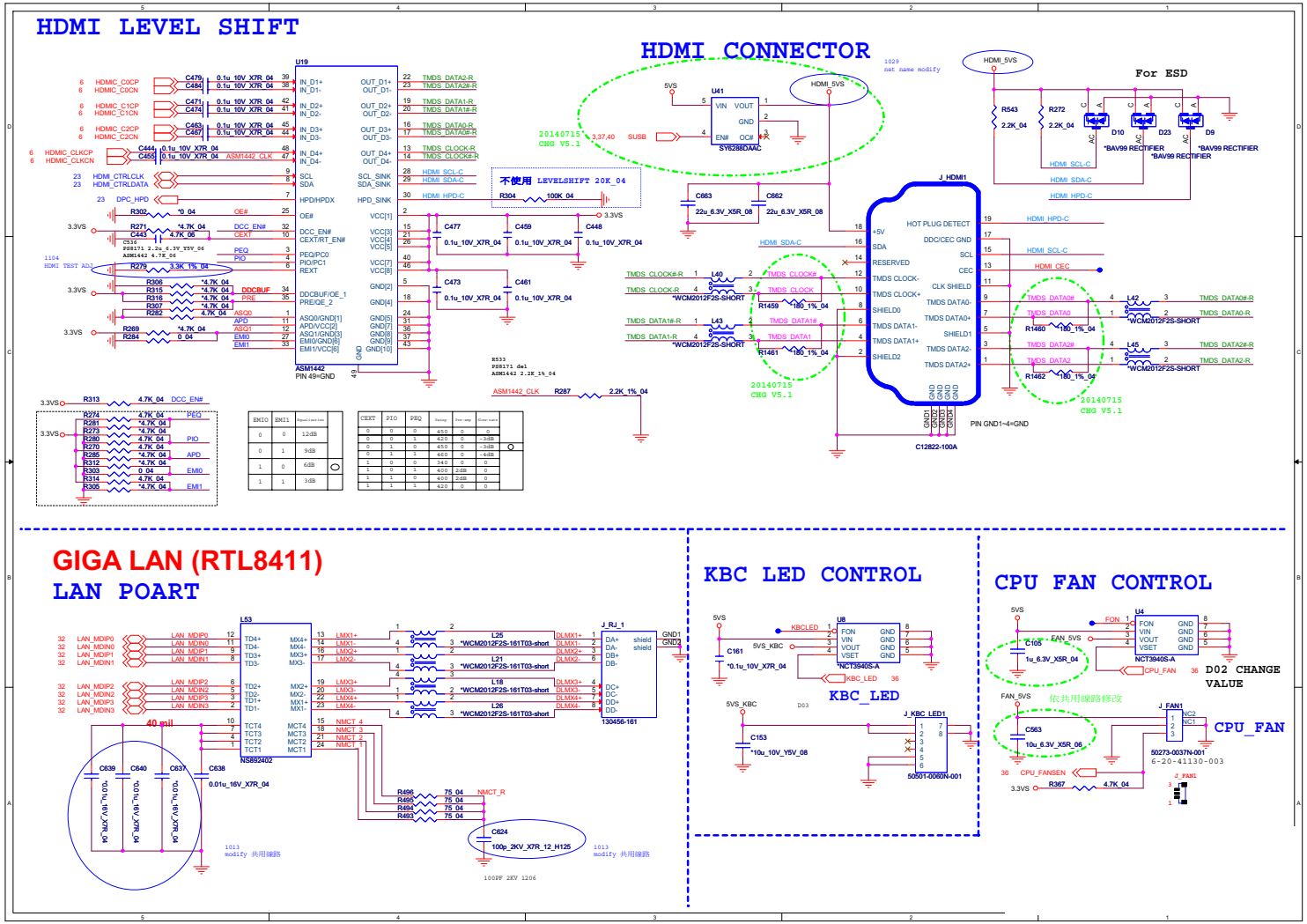

Sheet 34 of 46
HDMI, RJ45, Fan, KBC, LED

AUDIO CODEC VT1802S

Sheet 35 of 46
AUDIO CODEC
VT1802S

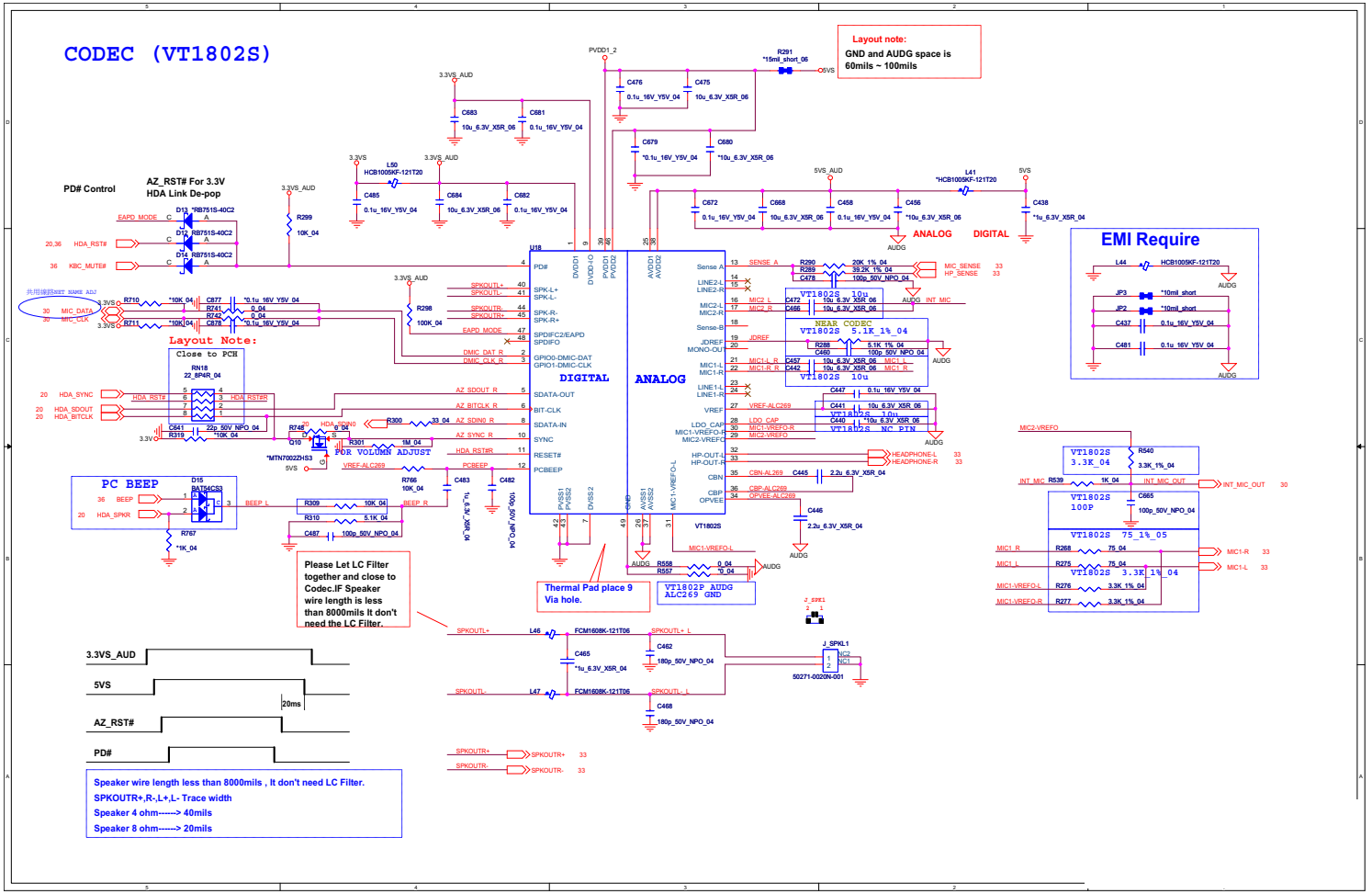

KBC-ITE IT8587

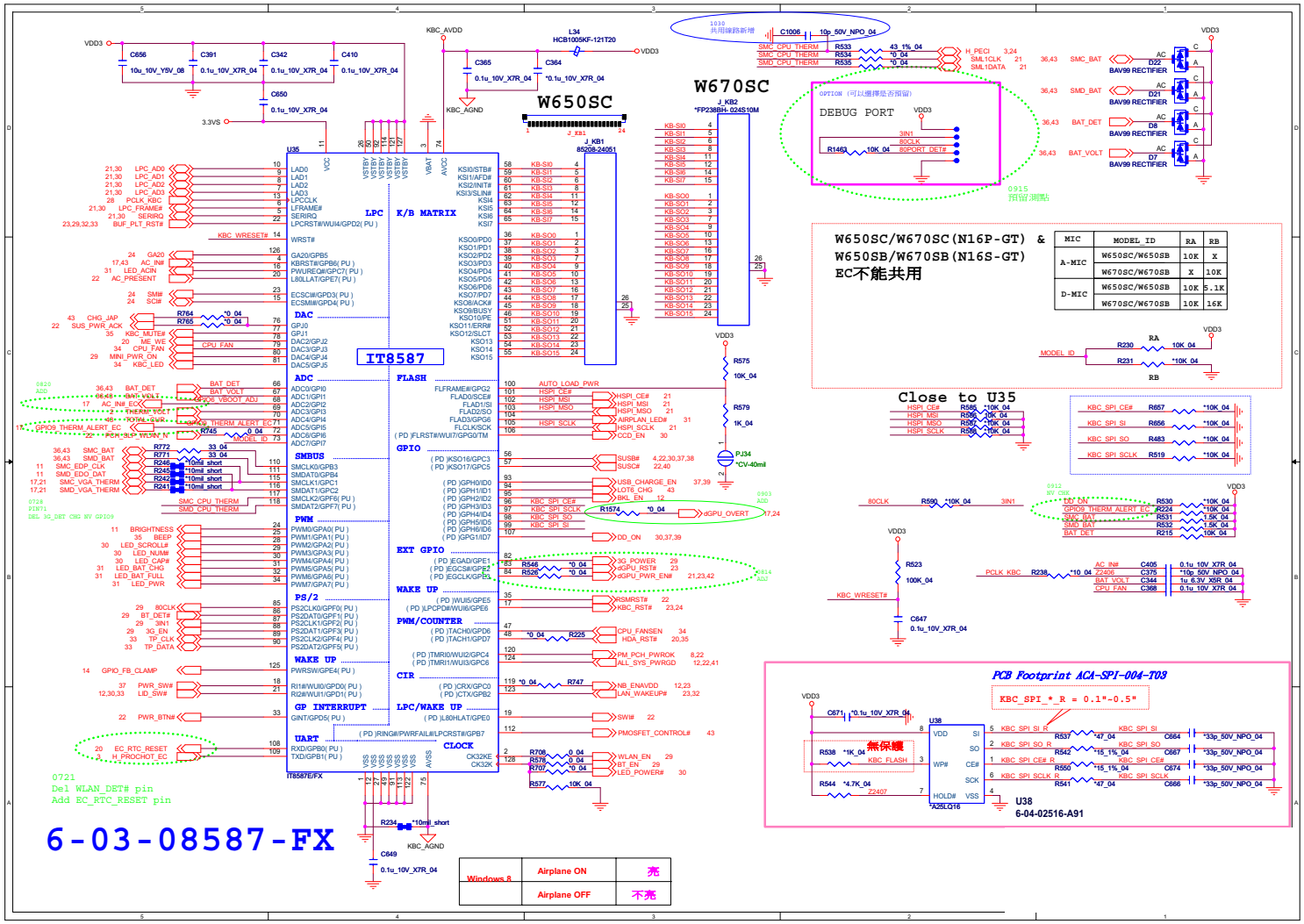

Sheet 36 of 46
KBC-ITE IT8587

5VS, 3VS, 3.3V, 5V

Sheet 37 of 46
5VS, 3VS, 3.3V, 5V

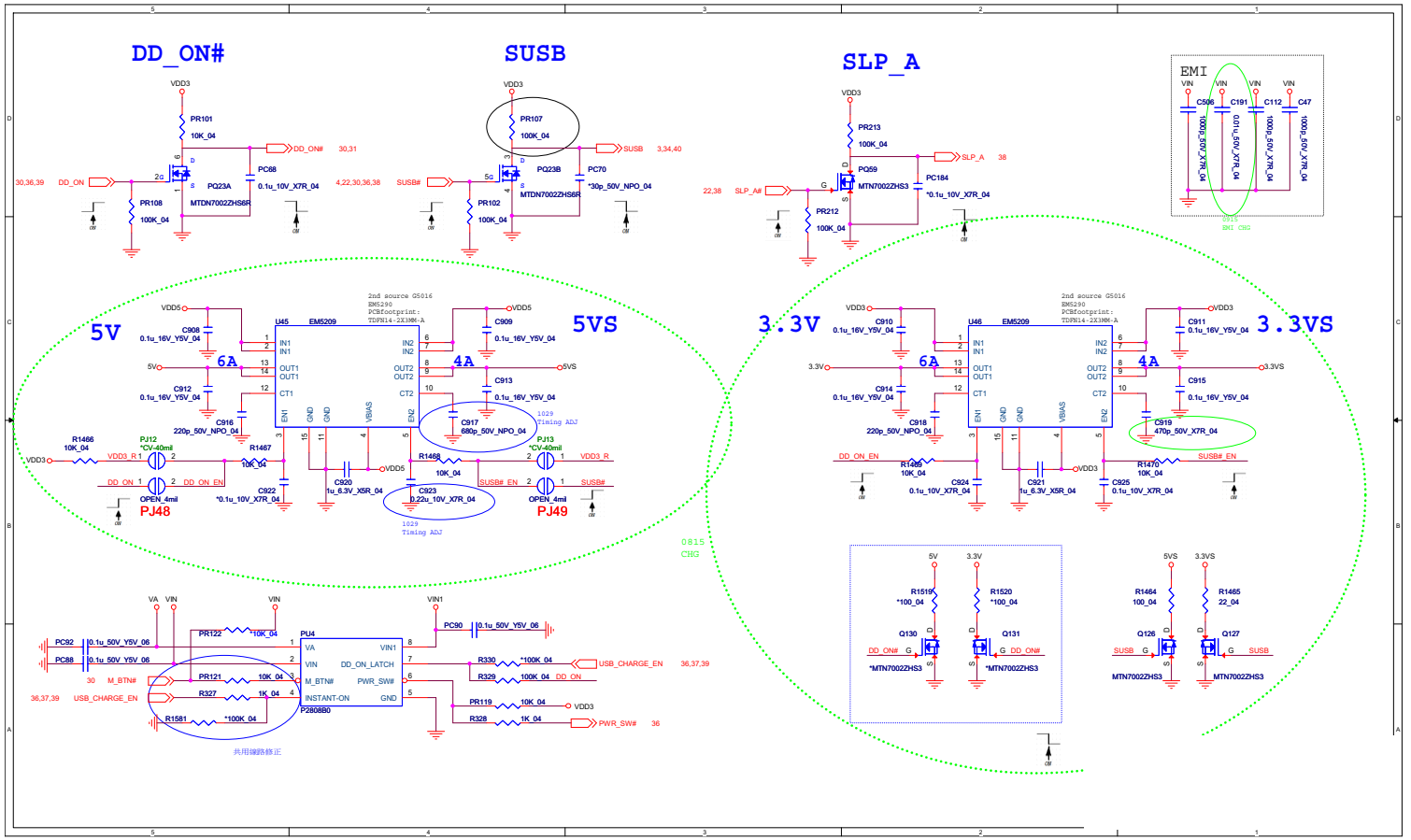

1.05V

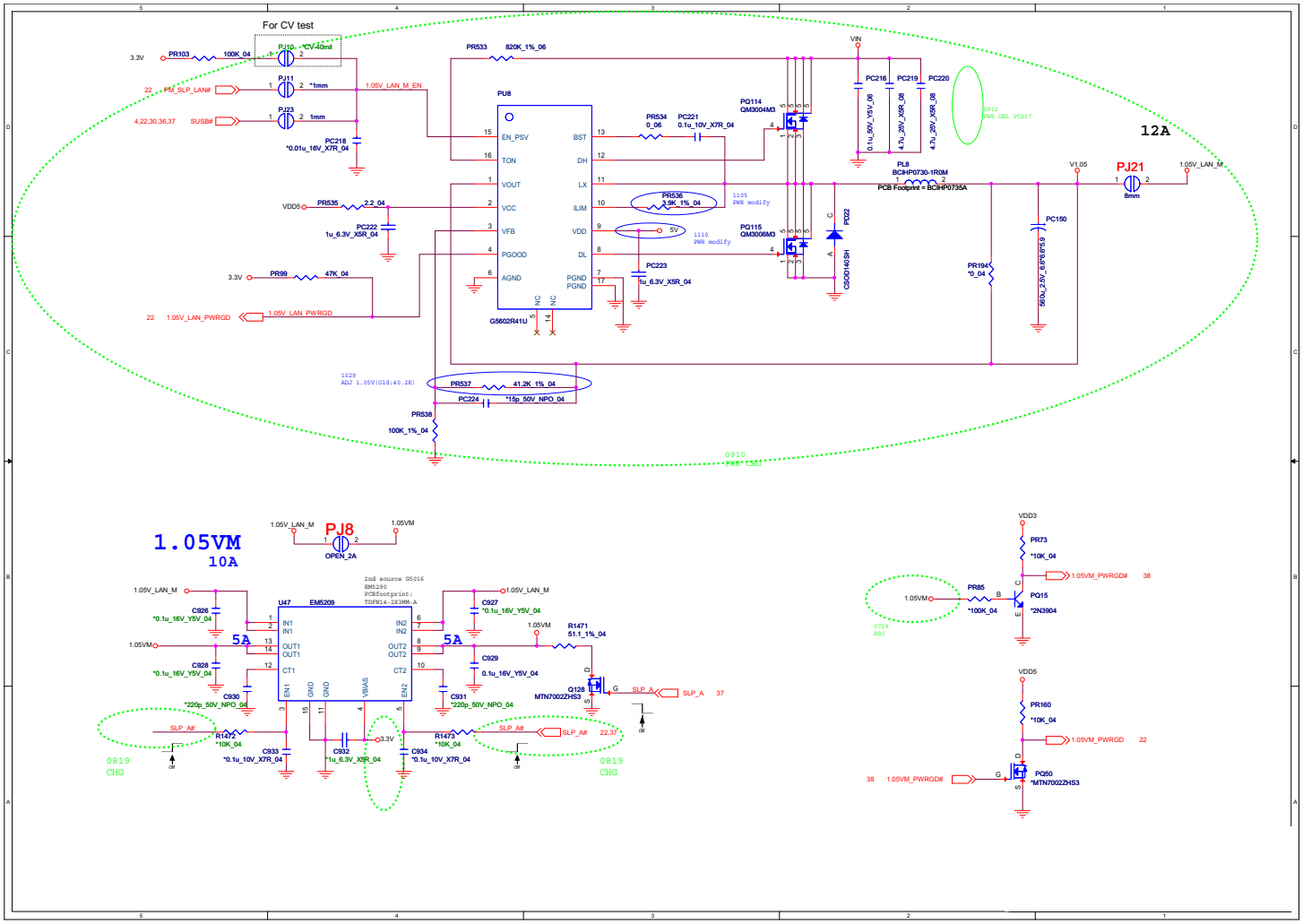

Sheet 38 of 46
1.05V

VDD3, VDD5

Sheet 39 of 46
VDD3, VDD5

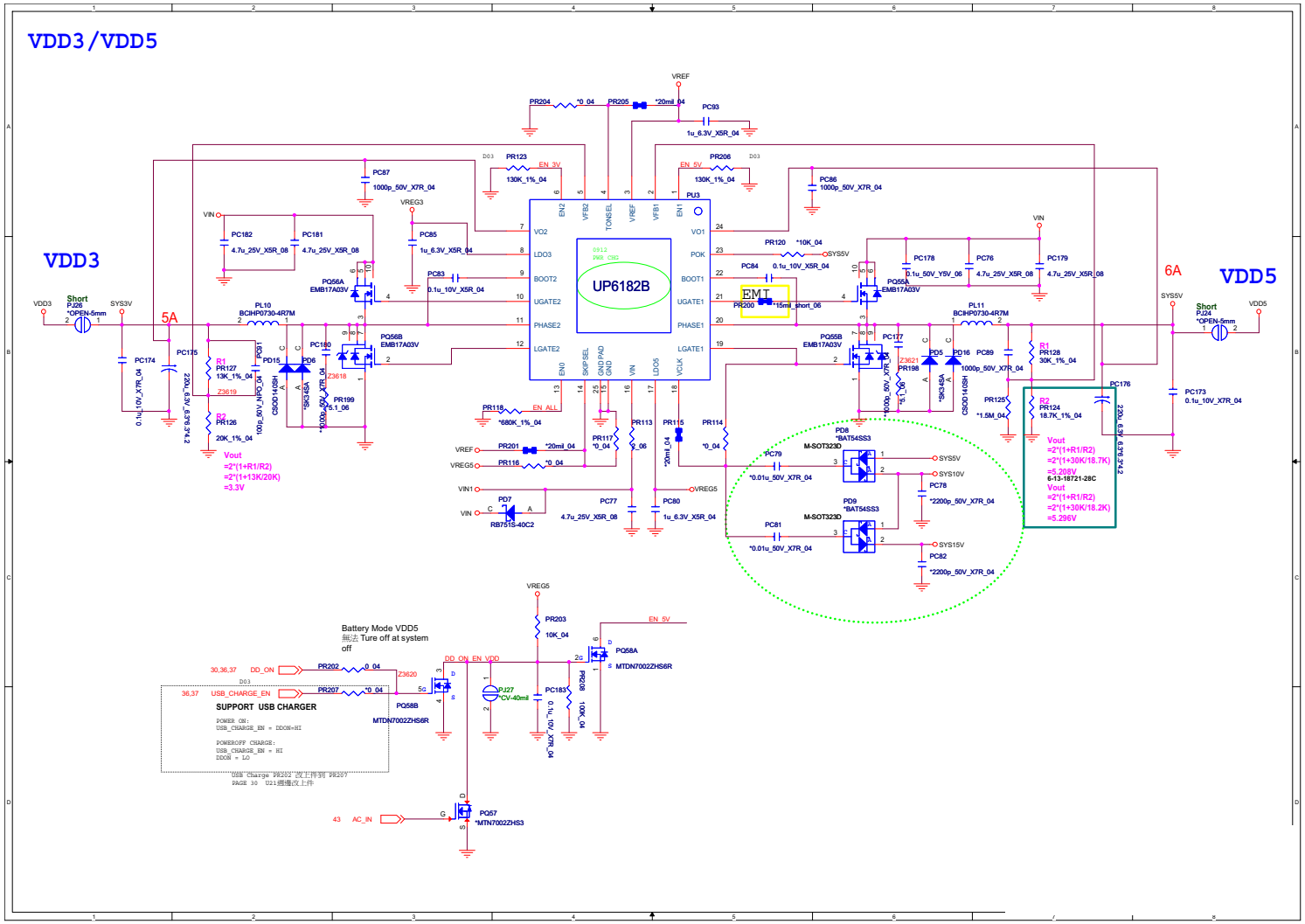

1.5V or 1.35V / 0.75VS, 1.5VS

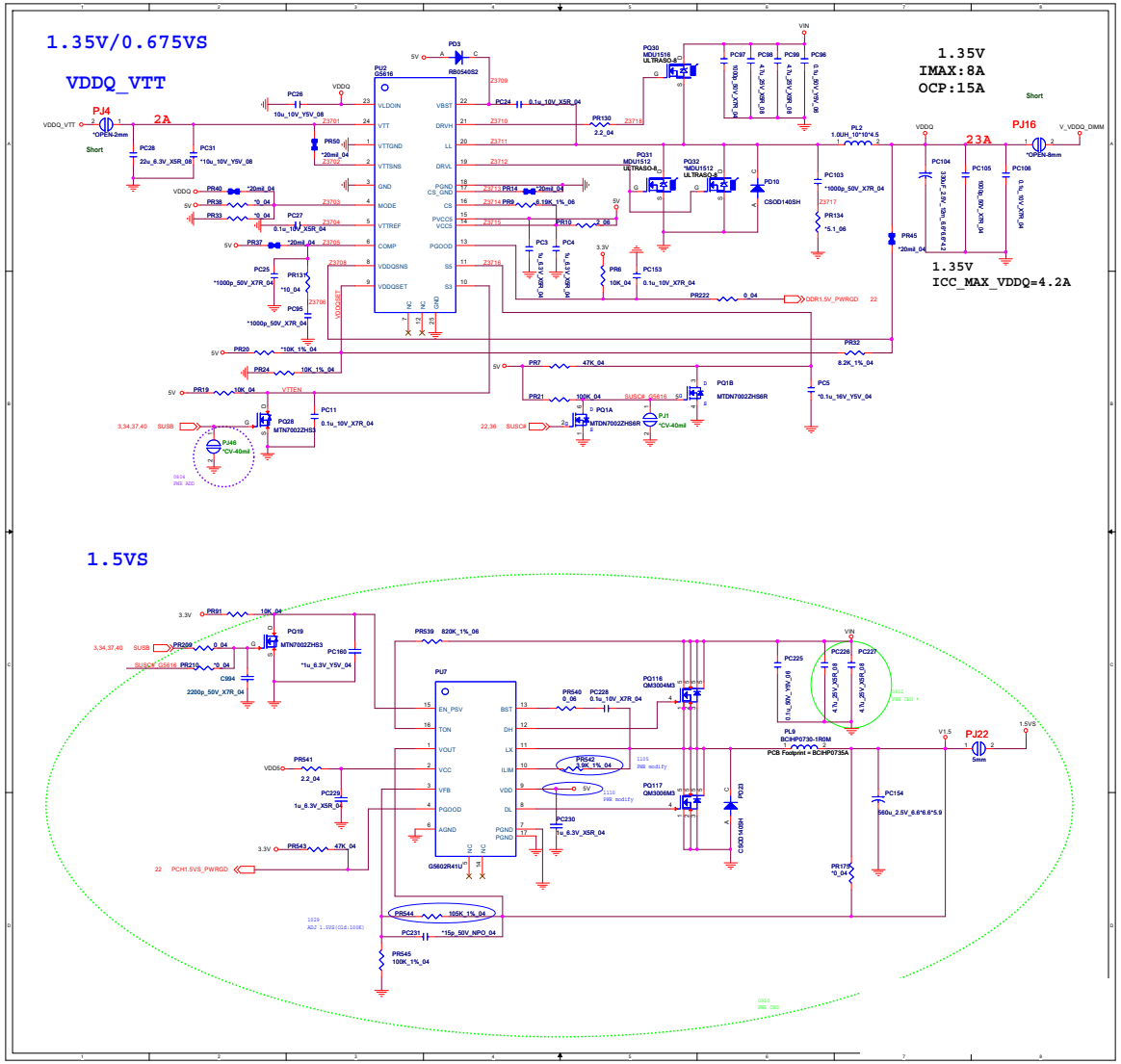

Sheet 40 of 46
1.5V or 1.35V / 0.75VS, 1.5VS

POWER VCORE

Sheet 41 of 46
POWER VCORE

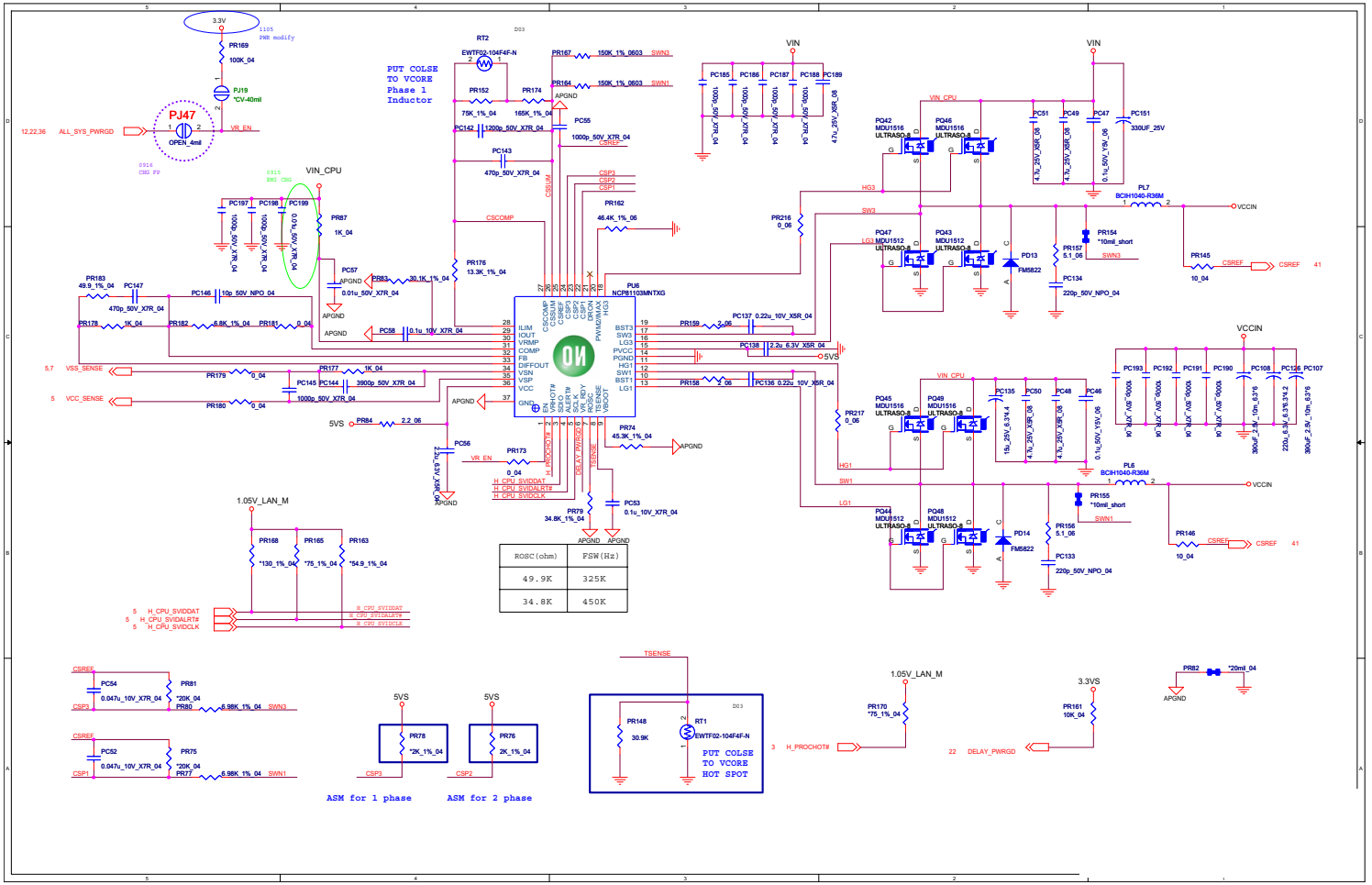

N16P/S, NVVDD, PEX, FBVDDQ

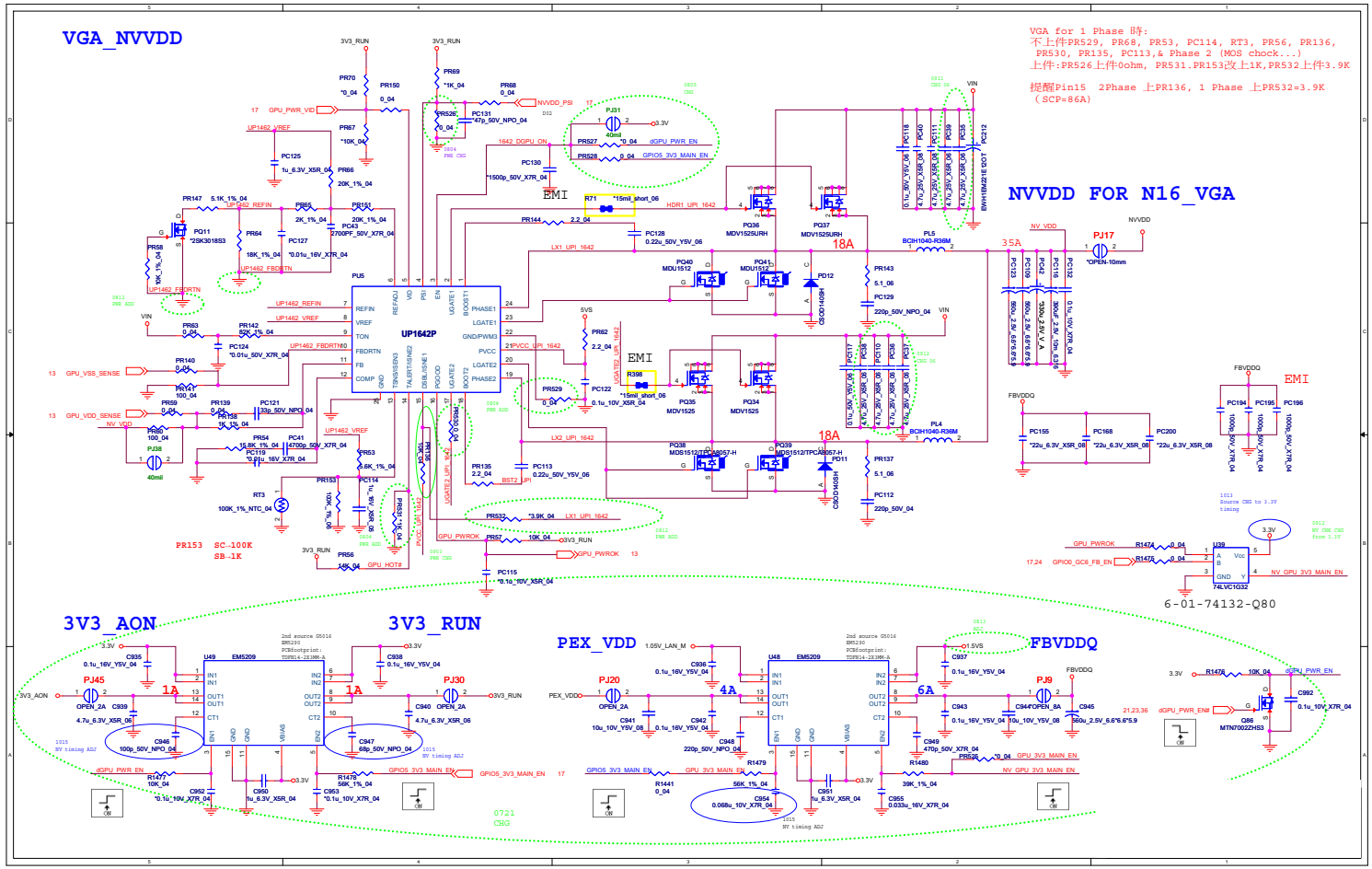

Sheet 42 of 46
N16P/S, NVVDD, PEX, FBVDDQ

DC IN, CHARGER

Sheet 43 of 46
DC IN, CHARGER

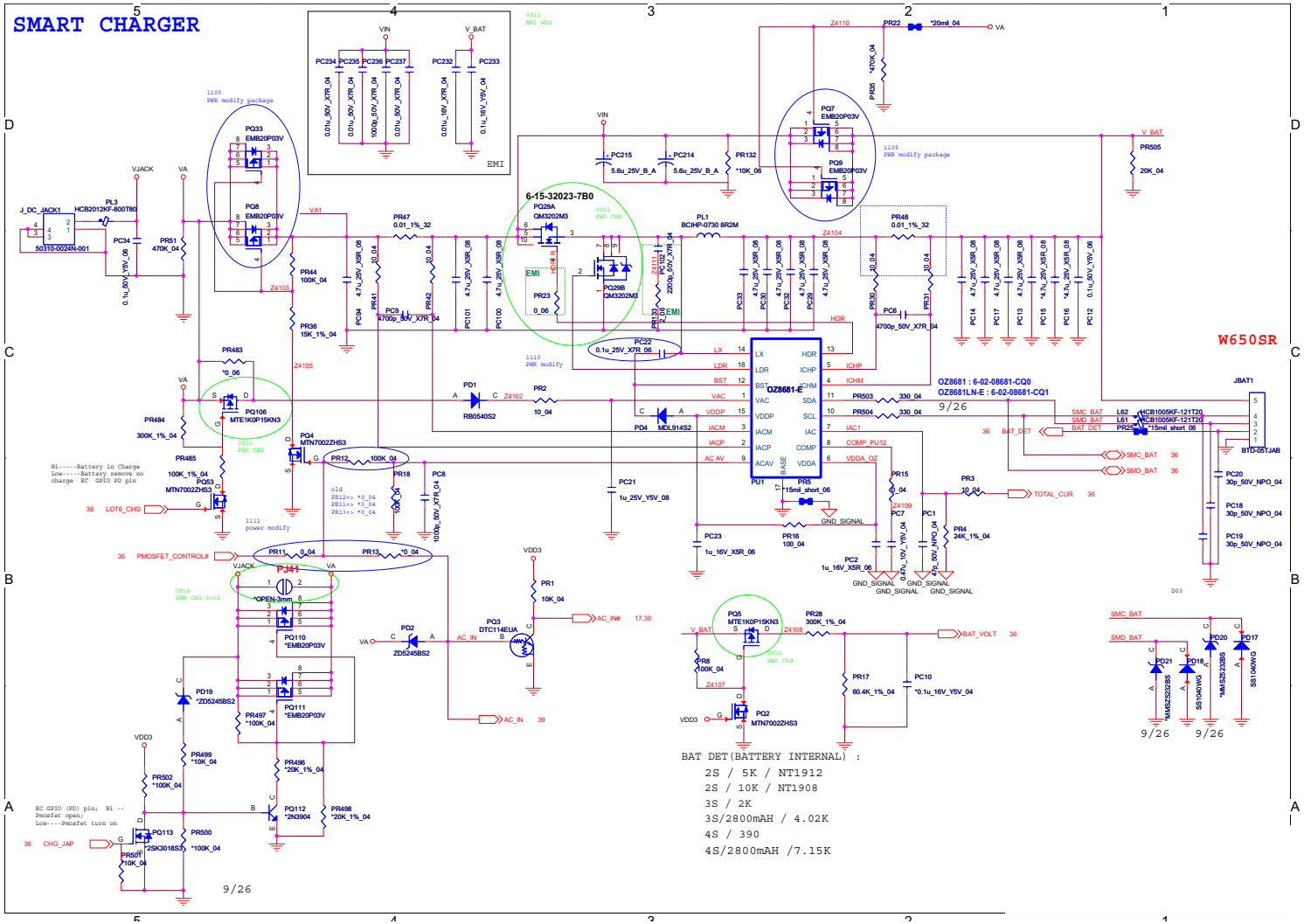

AUDIO BOARD

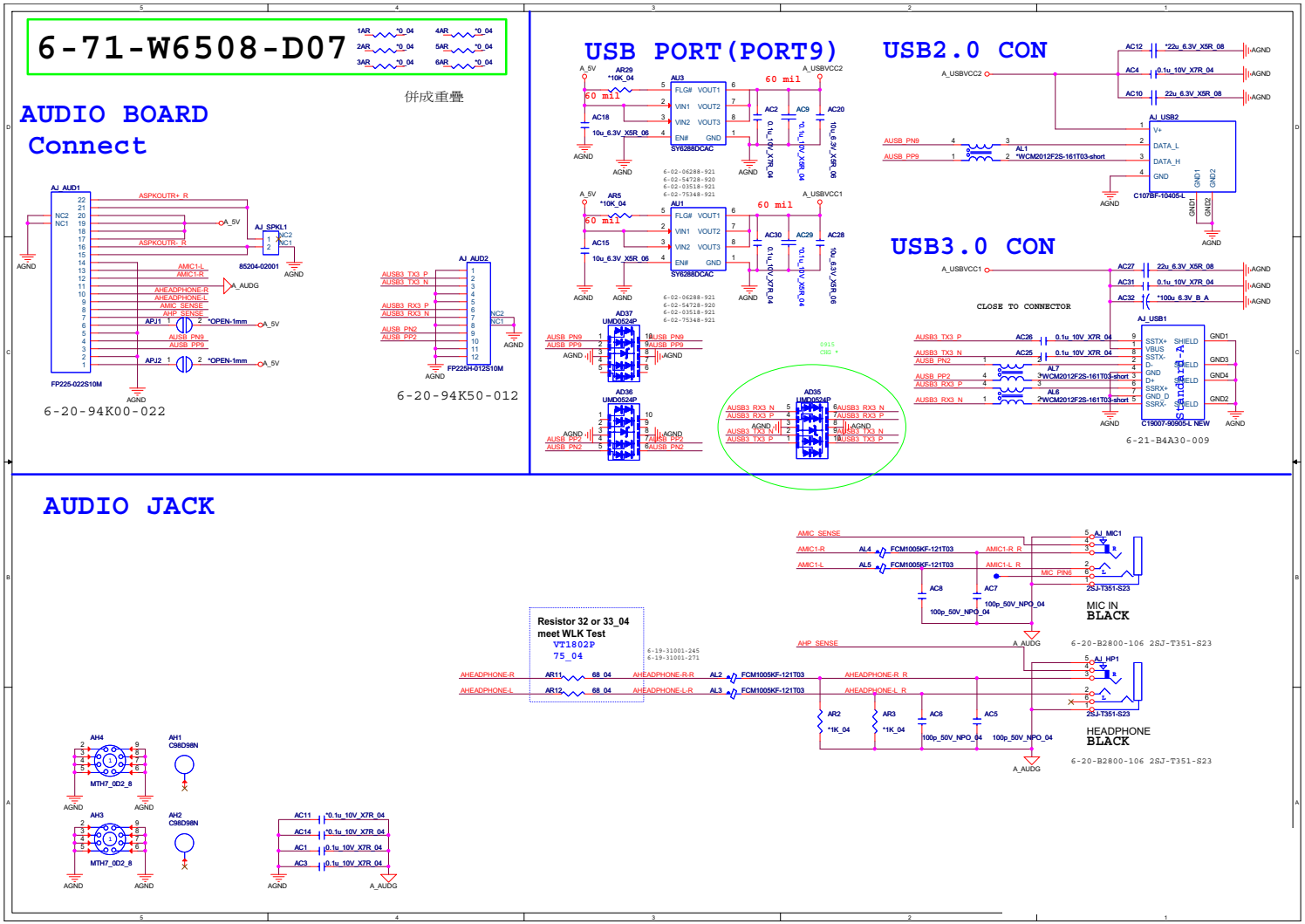

Sheet 44 of 46
AUDIO BOARD

POWER SWITCH BOARD

Sheet 45 of 46
POWER SWITCH BOARD

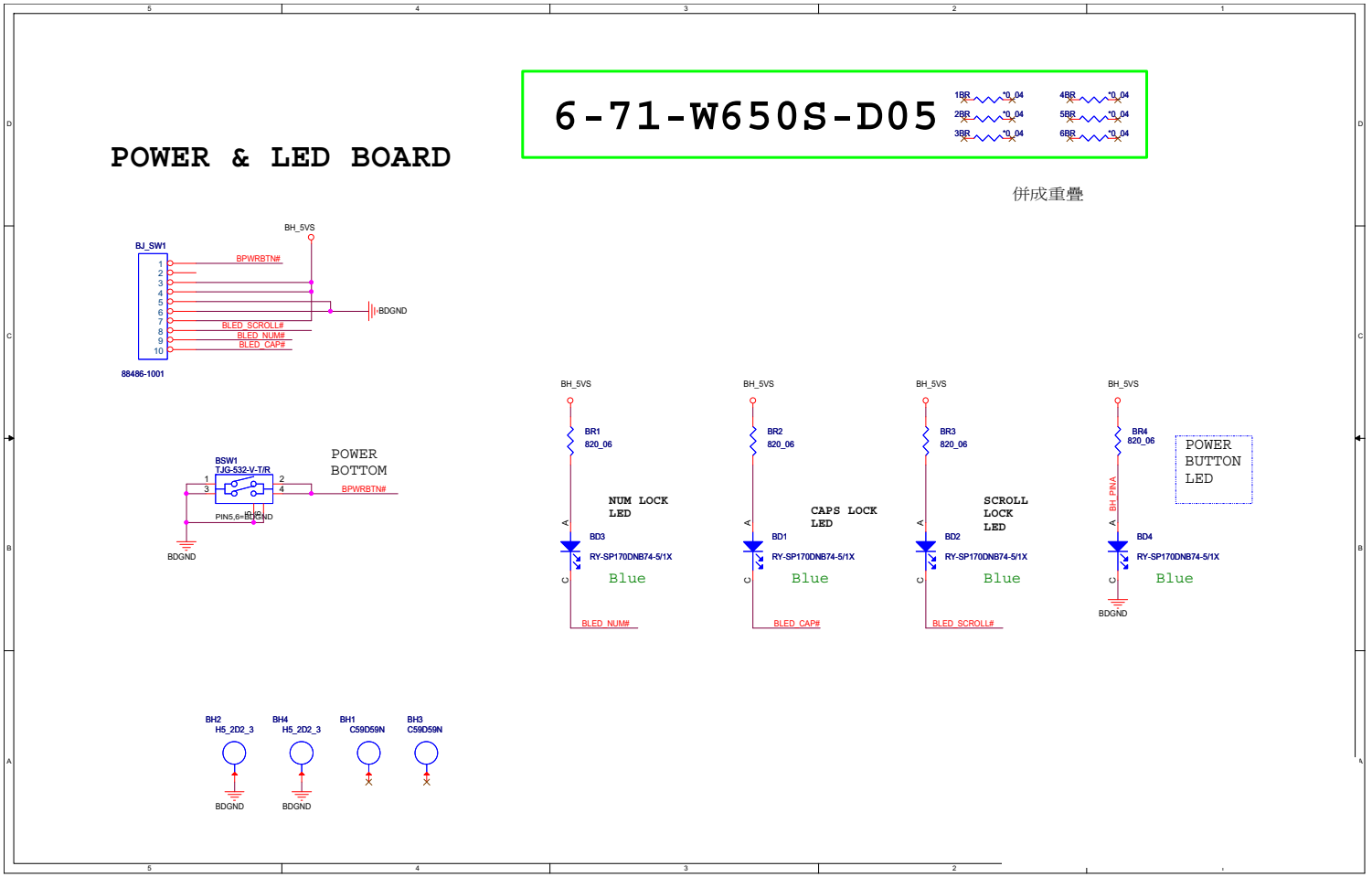

ODD to HDD BOARD

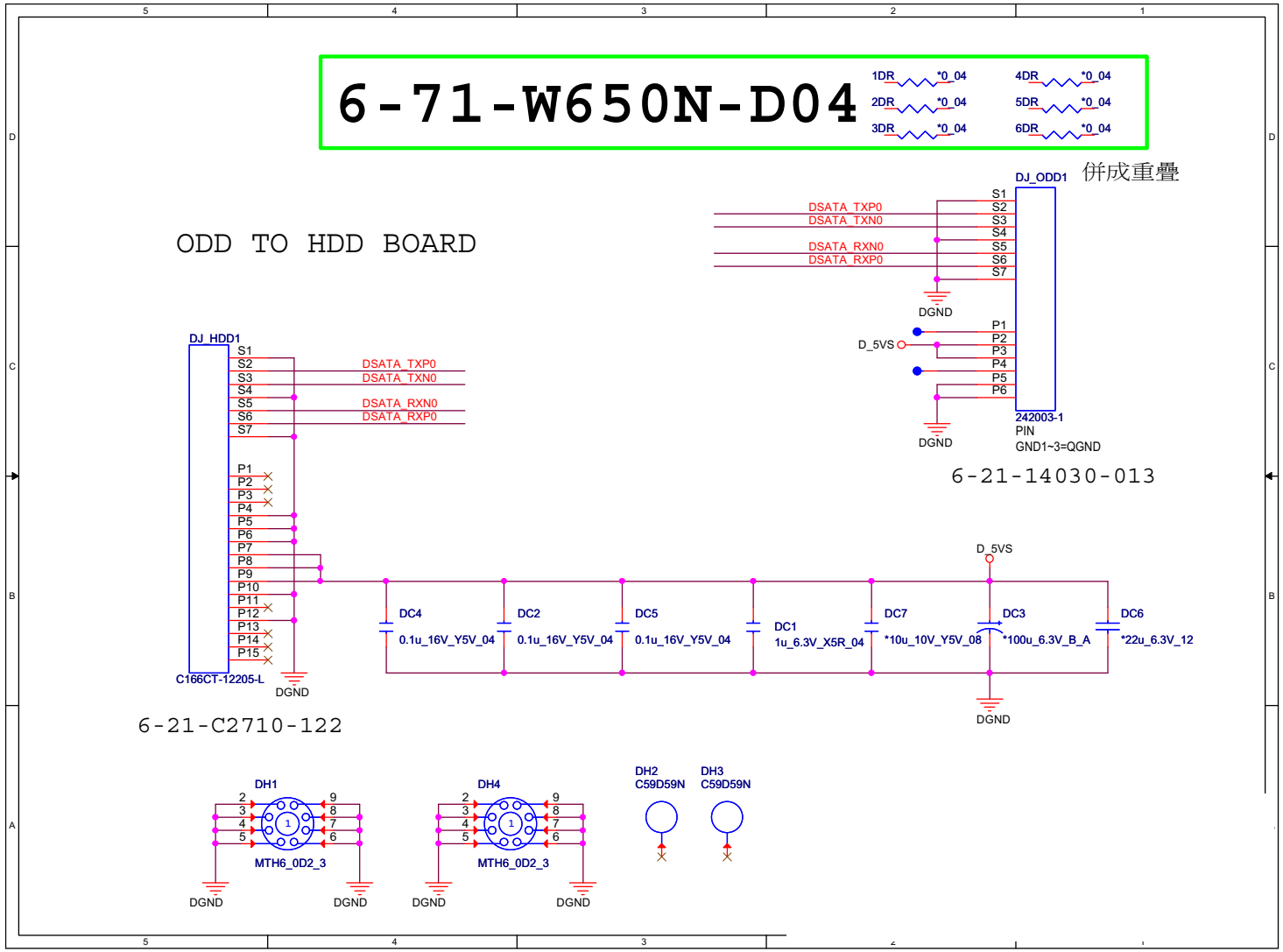

Sheet 46 of 46
ODD to HDD BOARD

B.Schematic Diagrams

Appendix C:Updating the FLASH ROM BIOS

To update the FLASH ROM BIOS, you must:

- Download the BIOS update from the web site.
- Unzip the files onto a bootable CD/DVD/USB Flash Drive.
- Reboot your computer from an external CD/DVD/USB Flash Drive.
- Use the flash tools to update the flash BIOS using the commands indicated below.
- Restart the computer booting from the HDD and press **F2** at startup enter the BIOS.
- Load setup defaults from the BIOS and save the default settings and exit the BIOS to restart the computer.
- After rebooting the computer you may restart the computer again and make any required changes to the default BIOS settings.

Download the BIOS

1. Go to **www.clevo.com.tw** and point to **E-Services** and click **E-Channel**.
2. Use your user ID and password to access the appropriate download area (BIOS), and download the latest BIOS files (the BIOS file will be contained in a batch file that may be run directly once unzipped) for your computer model (**see sidebar for important information on BIOS versions**).

Unzip the downloaded files to a bootable CD/DVD/ or USB Flash drive

1. Insert a bootable CD/DVD/USB flash drive into the CD/DVD drive/USB port of the computer containing the downloaded files.
2. Use a tool such as Winzip or Winrar to unzip all the BIOS files and refresh tools to your bootable CD/DVD/USB flash drive (you may need to create a bootable CD/DVD with the files using a 3rd party software).

Set the computer to boot from the external drive

1. With the bootable CD/DVD/USB flash drive containing the BIOS files in your CD/DVD drive/USB port, restart the computer and press **F2** (in most cases) to enter the BIOS.
2. Use the arrow keys to highlight the **Boot** menu.
3. Use the "+" and "-" keys to move boot devices up and down the priority order.
4. Make sure that the CD/DVD drive/USB flash drive is set first in the boot priority of the BIOS.
5. Press **F4** to save any changes you have made and exit the BIOS to restart the computer.

BIOS Version

Make sure you download the latest correct version of the BIOS appropriate for the computer model you are working on.

You should only download BIOS versions that are V1.00.XX or higher as appropriate for your computer model.

Note that BIOS versions are not backward compatible and therefore **you may not downgrade your BIOS to an older version** after upgrading to a later version (e.g if you upgrade a BIOS to ver 1.00.05, you **MAY NOT** then go back and flash the BIOS to ver 1.00.04).

Use the flash tools to update the BIOS

1. Make sure you are not loading any memory management programs such as HIMEM by holding the **F8** key as you see the message "**Starting MS-DOS**". You will then be prompted to give "**Y**" or "**N**" responses to the programs being loaded by DOS. Choose "N" for any memory management programs.
2. You should now be at the DOS prompt e.g: DISK **C**:\> (C is the designated drive letter for the CD/DVD drive/USB flash drive).
3. **Type the following command** at the DOS prompt:

   C:\> Flash.bat

4. The utility will then proceed to flash the BIOS.
5. You should then be prompted to press any key to restart the system or turn the power off, and then on again but make sure you remove the CD/DVD/USB flash drive from the CD/DVD drive/USB port before the computer restarts.

Restart the computer (booting from the HDD)

1. With the CD/DVD/USB flash drive removed from the CD/DVD drive/USB port the computer should restart from the HDD.
2. Press **F2** as the computer restarts to enter the BIOS.
3. Use the arrow keys to highlight the **Exit** menu.
4. Select **Load Setup Defaults** (or press **F3**) and select "**Yes**" to confirm the selection.
5. Press **F4** to save any changes you have made and exit the BIOS to restart the computer.

Your computer is now running normally with the updated BIOS

You may now enter the BIOS and make any changes you require to the default settings.